COASTAL FEDERAL CREDIT UNION- ATM ADDITION
SP-15-2010

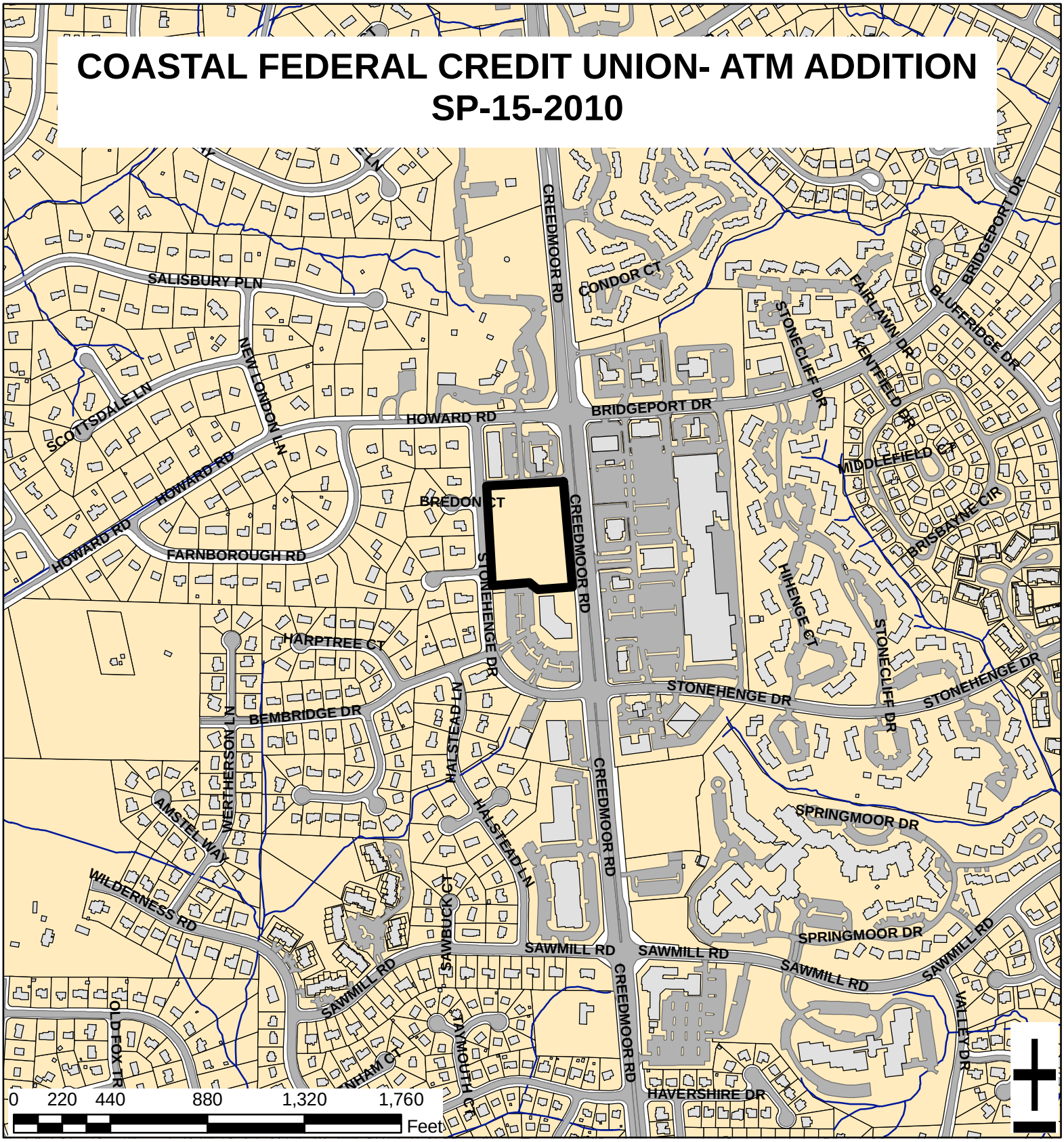

Zoning:	**O&I-2**	Proposed Dev.:	**2 Detached ATM's**
CAC:	**Northwest**	Planner:	**Meade Bradshaw**
Drainage	**Hare Snipe**	Phone:	**(919) 516-2664**
Basin:	**Creek**	Applicant Contact:	**Baker Eng. Consultants, Inc.**
Acreage:	**3.811**	Phone:	**(919) 417-3484**

SITE/UTILITY PLAN

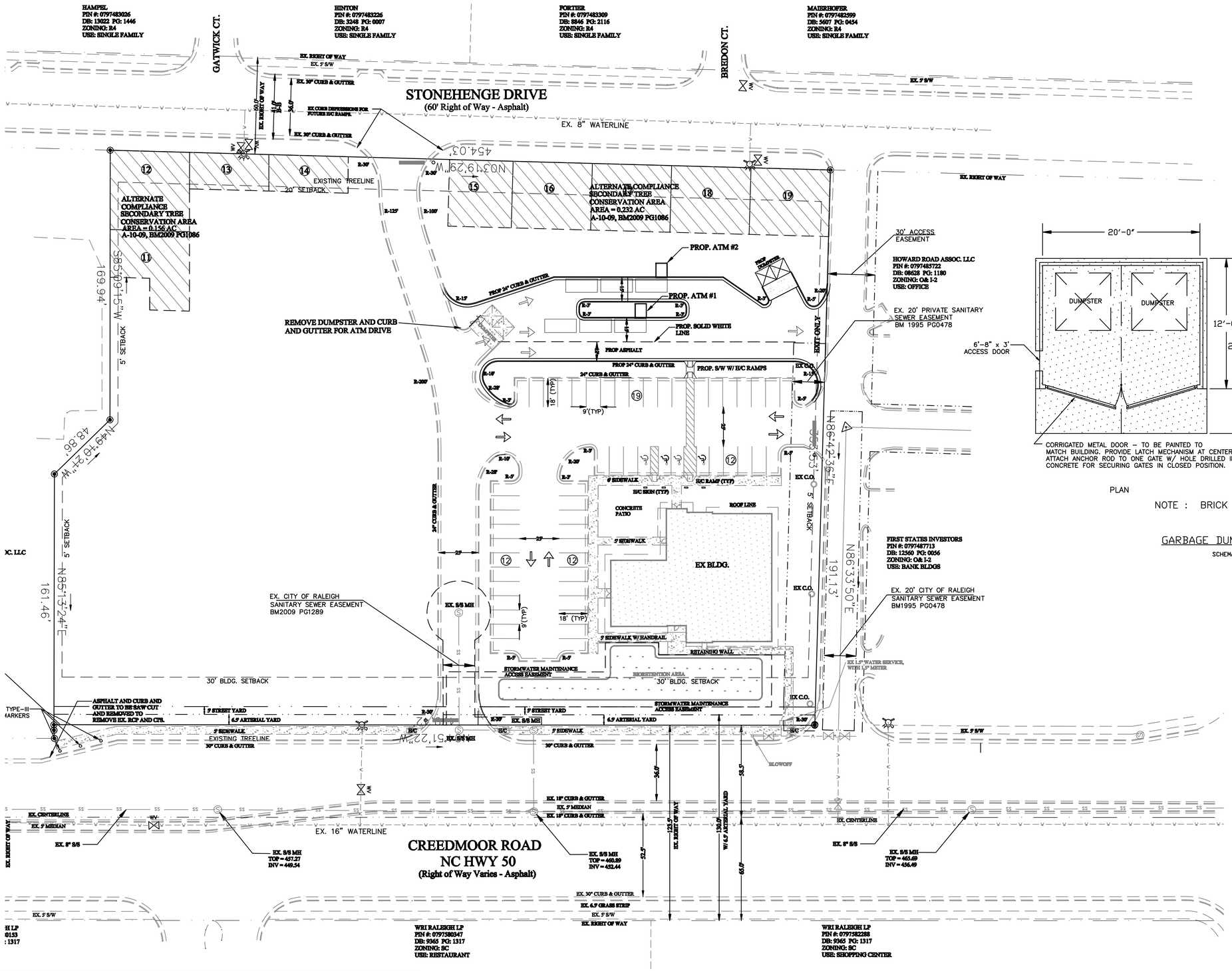

PLAN

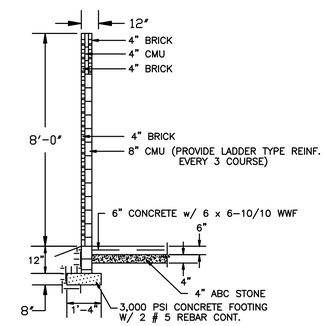

SECTION

NOTE : BRICK TO MATCH BUILDING

GARBAGE DUMPSTER DETAIL

SCHEMATIC NTS

SITE DATA TABLE

PIN #	0797486337
ZONING	O & I-2
TOTAL AREA	3.811 AC.
TREE CONSERVATION AREA	0.385 AC.

BUILDING SETBACKS:

FRONT	30 ft.
AGGREGATE FRONT & REAR	50 ft.
REAR	20 ft.
SIDE	5 ft.
AGGREGATE SIDE	10 ft.

60' 30' 0 60'

SCALE: 1"=30'

ALL CONSTRUCTION TO BE IN ACCORDANCE WITH ALL CITY OF RALEIGH & NCDOT STANDARDS, SPECIFICATIONS, AND DETAILS.

NO.	REVISION	DATE

SITE PLAN
COASTAL FEDERAL CREDIT UNION S/D
CREEDMOOR ROAD ATM ADDITION
RALEIGH, NC

NORTH CAROLINA PROFESSIONAL SEAL 022530 ENGINEER RICHARD W. BAKER III

BAKER ENGINEERING CONSULTANTS, INC.
Consulting Engineers
605 ADAMS STREET
RALEIGH, NORTH CAROLINA 27605
TELEPHONE: (919) 417-3484

DATE: 03/22/10

DRAWN: RWB

SHEET:

C3.0