Development SERVICES

FIRE • INSPECTIONS • PLANNING
PUBLIC UTILITIES • PUBLIC WORKS

Customer Service Center
One Exchange Plaza, Suite 400
Raleigh, North Carolina 27601
Phone 919-516-2495
Fax 919-516-2685

Grp# 264470

Preliminary Development Plan Application

When submitting plans, please check appropriate review type and include the Plan Checklist document.

Preliminary Approvals		FOR OFFICE USE ONLY
☒ Site Plans for Planning Commission or City Council ☐ Preliminary Administrative Site Plans ☐ Group Housing * ☐ Multifamily (Infill)*	☐ Subdivision* ☐ Infill Subdivision* ☐ Infill Recombination* ☐ Cluster Subdivision ☐ Expedited Subdivision Review	Transaction Number 318762
* May require Planning Commission or City Council Approval		

Section A

GENERAL INFORMATION

Development Name Watts Chapel Baptist Church

Proposed Use Worship & Office

Property Address(es) 3703 Tryon Road, & 3801 Tryon Road, Raleigh, NC 27606

Wake County Property Identification Number(s) for each parcel to which these guidelines will apply:

P.I.N. 0782-96-0851	P.I.N. 0782-86-5655	P.I.N.	P.I.N.

What is your project type? ☐ Apartment ☐ Banks ☐ Elderly Facilities ☐ Hospitals ☐ Hotels/Motels ☐ Industrial Building ☐ Mixed Residential ☐ Non-Residential Condo ☐ Office ☒ Religious Institutions ☐ Residential Condo ☐ Retail ☐ School ☐ Shopping Center ☐ Single Family ☐ Telecommunication Tower ☐ Townhouse ☐ Other: If other, please describe:

PRELIMINARY ADMINISTRATIVE REVIEW	Per City Code Section 10-2132.2, summarize the reason(s) this plan can be reviewed administratively not requiring Planning Commission or City Council approval.
PLANNING COMMISSION OR CITY COUNCIL REVIEW	Per City Code Section 10-2132.2, summarize the reason(s) this plan requires Planning Commission or City Council Preliminary Approval. Vehicular surface area will increase more than 25% and is within 400' of residential district.

CLIENT (Owner or Developer)	Company Watts Chapel Baptist Church		
	Name (s) CAREY SHORTER, Chair TRustee Ministry		
	Address 3703 Tryon Road, Raleigh, NC 27606		
	Phone 919-828-7348	Email CSHORTER@NC.RR.COM	Fax
CONSULTANT (Contact Person for Plans)	Company RWK, PA		
	Name (s) Chuck Piratzky		
	Address 101 W. Main Street, Garner, NC 27529		
	Phone 919-779-4854	Email cpiratzky@nc.rr.com	Fax 919-779-4056

DEVELOPMENT TYPE & SITE DATA TABLE (Applicable to all developments)

Has your project previously been through the pre-submittal process? If yes, provide the transaction #

Zoning Information	Building Information
Zoning District(s) RR	Proposed building use(s) Worship & Office
If more than one district, provide the acreage of each	Existing Building(s) sq. ft. gross 24,885
Overlay District WSOD	Proposed Building(s) sq. ft. gross
Total Site Acres 21.04 Inside City Limits ☒ Yes ☒ No	Total sq. ft. gross (existing & proposed) 24,885
Off street parking Required 116 Provided	Proposed height of building(s)
COA (Certificate of Appropriateness) case # N/A	FAR (floor area ratio percentage)
BOA (Board of Adjustment) case # A-N/A	Building Lot Coverage percentage (site plans only)
CUD (Conditional Use District) case # Z-N-A	
Stormwater Information	
Existing Impervious Surface 3.485acres/square feet	Flood Hazard Area ☒ Yes ☐ No
Proposed Impervious Surface 5.368 acres/square feet	**If Yes, please provide**
Neuse River Buffer ☒ Yes ☐ No Wetlands ☐ Yes ☒ No	Alluvial Soils X Flood Study FEMA Map Panel #

CONFORMITY WITH THE COMPREHENSIVE PLAN (Applicable to all developments)

Provide a description of how your plan conforms to the guidelines of the Comprehensive Plan 2030

FOR SUBDIVISIONS, MULTIFAMILY OR GROUP HOUSING PROJECTS ONLY

1. Total # Of Townhouse Lots Detached Attached	11. Total number of Open Space (only) lots
2. Total # Of Single Family Lots	12. Total number of all lots
3. Total # Of Apartment Or Condominium Units	13. Is your project a cluster unit development? ☐ Yes ☐ No
4. Total # Of Congregate Care Or Life Care Dwelling Units	**If Yes, please answer the questions below:**
5. Total # Of Mobile Home Lots	a) Total number of Townhouse Lots
6. Total Number of Hotel Units	b) Total number of Single Family Lots
7. Overall Total # Of Dwelling Units (1-6 Above)	c) Total number of Group Housing Units
8. Bedroom Units 1br 2br 3br 4br or more	d) Total number of Open Space Lots
9. Overall Unit(s)/Acre Densities Per Zoning District(s)	e) Minimum Lot Size
10. If your project is an infill subdivision, provide the infill calculations per City Code 10-3032 on the front cover of your drawing sets	f) Total Number of Phases
	g) Perimeter Protective Yard Provided ☐ Yes ☐ No
	h) Must provide open space quotient per City Code 10-3071 (5)

SIGNATURE BLOCK (Applicable to all developments)

In filing this plan as the property owner(s), I/we do hereby agree and firmly bind ourselves, my/our heirs, executors, administrators, successors and assigns jointly and severally to construct all improvements and make all dedications as shown on this proposed subdivision plan as approved by the City.

I hereby designate CHARLES HOLMES to serve as my agent regarding this application, to receive and respond to administrative comments, to resubmit plans on my behalf and to represent me in any public meeting regarding this application.

I/we have read, acknowledge and affirm that this project is conforming to all application requirements applicable with the proposed development use.

Signed [signature] 10/17/11 Date

Signed _____ Date

Section B

TO BE COMPLETED BY APPLICANT			TO BE COMPLETED BY CITY STAFF		
	YES	N/A	YES	NO	N/A
General Requirements					
1. Filing Fee for Plan Review – Payments may be made by cash, Visa, Master Card or check made payable to: City of Raleigh (No fee for Infill recombination)	☒		✓		
2. **Preliminary Development Plan Application** completed and signed by the property owner	☒		✓		
3. Client must complete and print page 1 and 2 of the **Preliminary Development Plan Application** to the plan cover sheet (not applicable for infill recombination)	☒	☐	✓		
4. I have referenced the **Preliminary Development Plan Checklist** and by using this as a guide, it will ensure that I receive a complete and thorough first review by the City of Raleigh	☒		✓		
5. Provide the following plan sheets:	☐				
a) Cover sheet: includes general notes, owner's name, contact's name, telephone number, mailing address and email address	☒		✓		
b) Existing Conditions Sheet	☒	☐	✓		
c) Proposed Site, Subdivision Plan, or Recombination Plan	☒		✓		
d) Proposed Grading and Stormwater Plan	☒	☐	✓		
e) Proposed Utility Plan, including Fire	☐	☒			
f) Proposed Tree Conservation Plan	☒	☐			
g) Proposed Landscaping Plan (Landscape Plan not required for commercial subdivisions)	☒	☐	✓		
h) Building elevations that show maximum height from natural and finished grade, buildings to be removed	☐	☒			
6. Ten (10) sets of proposed plans to engineering scale (1" = 20', 1" =100', etc.), and date of preparation. For re-submittals only – include all revision dates	☒		✓		
7. Plan size 18"x24" or 24"x36"	☒		✓		
8. A vicinity map no smaller/less than 1"=500' and no larger than 1"=1000' to the inch, showing the position of the subdivision with its relation to surrounding streets and properties, and oriented in the same direction as the preliminary plan	☒		✓		
9. Include sheet index and legend defining all symbols with true north arrow, with north being at the top of the map	☒		✓		
10. Digital copy of only the plan and elevations, if applicable. The purpose of this image is to illustrate the basic character of the preliminary plan. It should contain only such basic information as: building outline, landscaping, parking and drives, stormwater facilities, and lot boundary. The digital image should be provided in the form of .pdf on a CD. If the plan was not digitally created, provide an 8 ½" x 11" reduction of the plan. Label the CD with the plan name, case file number, and indicate how many times the plan has been resubmitted for review	☒				
11. Wake County School Form, if dwelling units are proposed	☐	☒			
12. Preliminary stormwater quantity and quality summary and calculations package	☒	☐			
13. For secondary tree conservation areas, include two (2) copies of the tree cover report completed by a certified arborist, North Carolina licensed landscape architect, or North Carolina registered forester	☒	☐			

WATTS CHAPEL BAPTIST CHURCH
SP-68-2011

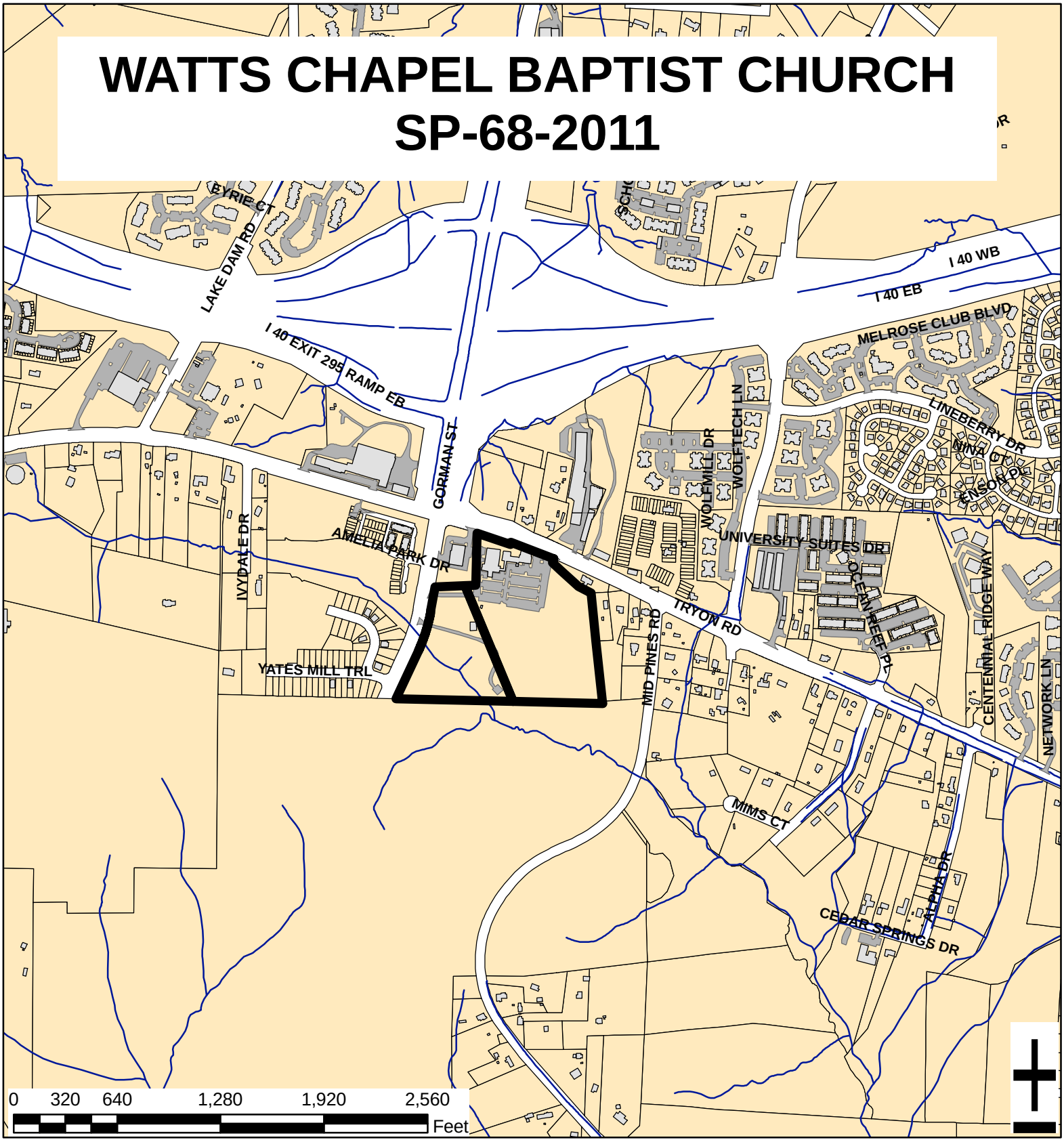

Zoning:	**RR**	Number of Lots:	**1**
CAC:	**WEST**	Planner:	**JAMES MARAPOTI**
Drainage Basin:	**WALNUT CREEK**	Phone:	**(919) 516-2642**
		Applicant Contact:	**RWK, PA**
Acreage:	**21.04**	Phone:	**(919) 779-4854**

INDEX TO SHEETS

SHEET NO.	DESCRIPTION
CS	COVER SHEET
C1	EXISTING CONDITIONS
C2	STAKING AND LAYOUT
C3	EROSION CONTROL PLAN
C3.D	EROSION CONTROL DETAILS
C4	GRADING & STORM WATER CONTROL PLAN
C4.D	GRADING & STORM WATER DETAILS
C5	TREE CONSERVATION PLAN
L1	PLANTING PLAN
L1.D	SITE NOTES & DETAILS

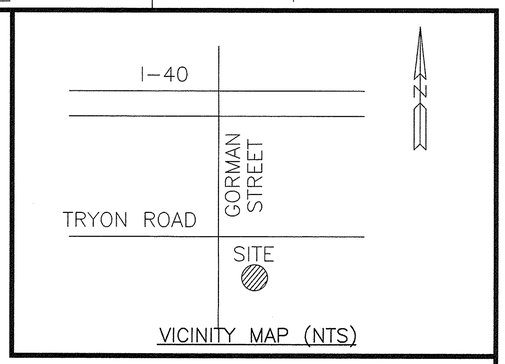

SITE IMPROVEMENTS
WATTS CHAPEL BAPTIST CHURCH

3703 TRYON ROAD
CITY of RALEIGH, WAKE COUNTY
NORTH CAROLINA

ATTENTION CONTRACTORS

THE CONSTRUCTION CONTRACTOR RESPONSIBLE FOR THE EXTENSION OF WATER AND SEWER, AS APPROVED IN THESE PLANS, IS RESPONSIBLE FOR CONTACTING THE CENTRAL ENGINEERING DEPARTMENT AT 831-6810, AND THE PUBLIC UTILITIES DEPARTMENT AT 890-3400 AT LEAST TWENTY-FOUR HOURS PRIOR TO BEGINNING ANY OF THEIR CONSTRUCTION.

FAILURE TO NOTIFY BOTH CITY DEPARTMENTS IN ADVANCE OF BEGINNING CONSTRUCTION WILL RESULT IN THE ISSUANCE OF MONETARY FINES, AND REQUIRE REINSTALLATION OF ANY WATER OR SEWER FACILITIES NOT INSPECTED AS A RESULT OF THIS NOTIFICATION FAILURE.

FAILURE TO CALL FOR INSPECTION, INSTALL A DOWNSTREAM PLUG, HAVE PERMITTED PLANS ON THE JOBSITE, OR ANY OTHER VIOLATION OF CITY OF RALEIGH STANDARDS WILL RESULT IN A FINE AND POSSIBLE EXCLUSION FROM FURTHER WORK IN THE CITY OF RALEIGH.

PRIVATE
WATER DISTRIBUTION/EXTENSION SYSTEM

THE CITY OF RALEIGH CONSENTS TO THE CORRECTION TO ITS PUBLIC WATER SYSTEM AND EXTENSION OF THE PRIVATE WATER DISTRIBUTION SYSTEM AS SHOWN ON THE PLAN. THE MATERIAL AND CONSTRUCTION METHODS USED FOR THIS PROJECT SHALL CONFIRM TO THE STANDARDS AND SPECIFICATIONS OF THE CITY'S PUBLIC UTILITIES HANDBOOK.

CITY OF RALEIGH
PUBLIC ULTILITIES DEPARTMENT PERMIT#_____

AUTHORIZATION TO CONSTRUCT_____

DATE_____

UTILITY INSTALLATIONS AND OTHER PUBLIC FACILITIES, INCLUDING SIDEWALKS AND HANDICAP RAMPS ARE TO BE CONSTRUCTED ON ALL STREETS AS SPECIFIEDBY CITY CODE. THESE FACILITIES HAVE BEEN APPROVED BY THE CITY OF RALEIGH AND SHALL BE SO INSTALLED UNLESS A CHANGEIS AUTHORIZED BYWRITTEN APPROVAL. PUBLIC SANITARY SEWER EASMENTS ARE TO BE RECORDEDPRIOR TO FINAL ACCEPTED

SIGNITURE:

CHEIF ENGINEER _____

DIR. OF PUBLIC UTILITIES _____

TRAFFIC ENGINEER _____

CONSERVATION ENGINEER _____

GENERAL SITE NOTES

1. ALL CONSTRUCTION TO BE IN ACCORDANCE WITH THE LATEST CITY OF RALEIGH STANDARDS AND SPECIFICATIONS.
2. ALL CONSTRUCTION SHALL CONFORM WITH APPLICABLE STATE AND LOCAL CONSTRUCTION STANDARDS AS IDENTIFIED IN THESE PLANS. THE CONTRACTOR SHALL MAINTAIN A CURRENT RELEASE OF THE STATE AND LOCAL LAND DEVELOPMENT STANDARDS MANUAL ON THE PROJECT SITE FOR REFERENCE DURING CONSTRUCTION OF THE PROJECT.
3. ALL DIMENSIONS ARE TO EDGE OF PAVEMENT AND BACK OF CURB TO BACK OF CURB UNLESS OTHERWISE NOTED. ALL CURB RADII GIVEN TO THE FACE OF CURB.
4. ALL PAINT STRIPING, PAVEMENT MARKINGS, AND SIGNAGE SHALL CONFORM TO THE "MANUAL ON UNIFORM TRAFFIC CONTROL DEVICES" OR AS OTHERWISE SPECIFIED. ALL REFERENCED SIGN STANDARDS ARE TAKEN FROM THE "MANUAL ON UNIFORM TRAFFIC CONTROL DEVICES". ALL NEW SIGNS SHALL BE MOUNTED ON GALVANIZED POSTS AND IN ACCORDANCE WITH STATE AND LOCAL REGULATIONS.
5. THE CONTRACTOR IS RESPONSIBLE FOR THE LOCATION AND PROTECTION OF ALL EXISTING UTILITIES DURING CONSTRUCTION. AT LEAST 48 HOURS PRIOR TO ANY DEMOLITION, GRADING, OR CONSTRUCTION ACTIVITY, THE CONTRACTOR SHALL NOTIFY THE CITY OF RALEIGH PUBLIC UTILITIES DEPARTMENT FOR PROPER IDENTIFICATION OF EXISTING UTILITIES WITH THE PROJECT SITE.
6. THE CONTRACTOR SHALL VERIFY DIMENSIONS AT JOBSITE.
7. CONTRACTOR SHALL INSTALL ACCESSIBLE RAMPS PER CITY OF RALEIGH AND ADA STANDARDS AT ALL DRIVE AND BUILDING LOCATIONS AS REQUIRED.
8. CONTRACTOR IS RESPONSIBLE FOR THE INSTALLATION AND MAINTENANCE OF ALL EROSION CONTROL DEVICES SHOWN ON THE APPROVED PLANS FOR THE DURATION OF CONSTRUCTION OR UNTIL FINAL INSPECTION.
9. CONTRACTOR SHALL VERIFY LOCATION AND DEPTH OF EXISTING STORMWATER STRUCTURES. CONTRACTOR SHALL NOTIFY OFF-SITE GRADING, PERMISSION MUST BE OBTAINED FROM THE AFFECTED PROPERTY OWNERS.
10. NONSTANDARD ITEMS (IE: PAVERS, IRRIGATION SYSTEMS, ETC.) IN THE RIGHT-OF-WAY REQUIRE A RIGHT-OF-WAY ENCROACHMENT AGREEMENT WITH THE STATE AND LOCAL TRANSPORTATION DEPARTMENTS BEFORE INSTALLATION.
11. PROPERTY LINE AND RIGHT-OF-WAY MONUMENTS SHALL NOT BE DISTURBED BY CONSTRUCTION. IF DISTURBED, THEY SHALL BE RESET TO THEIR ORIGINAL LOCATIONS AT THE CONTRACTOR'S EXPENSE BY A REGISTERED LAND SURVEYOR.
12. PROOF ROLL BUILDING AND ALL PARKING AREAS. NOTIFY OWNER OF ANY UNACCEPTABLE AREAS.
13. BUILDING DIMENSIONS SHOWN ON THE CIVIL ENGINEERING PLANS ARE FOR REFERENCE PURPOSES ONLY. CONTRACTOR SHALL USE THE ARCHITECTURAL AND STRUCTURAL PLANS FOR EXACT BUILDING DIMENSIONS
14. ALL SIDEWALK, CURB AND GUTTER, STREET PAVING, CURB CUTS, DRIVEWAY APPROACHES, HANDICAP RAMPS, ETC. CONSTRUCTED OUTSIDE THE PROPERTY LINE IN THE RIGHT-OF-WAY SHALL CONFIRM TO ALL MUNICIPAL AND/OR STATE SPECIFICATIONS AND REQUIREMENTS.
15. THE CONTRACTOR SHALL PROVIDE AS-BUILT RECORDS OF ALL CONSTRUCTION (INCLUDING UNDERGROUND UTILITIES) TO OWNER AT THE END OF CONSTRUCTION.

NC ONE CALL BEFORE YOU DIG
STOP
CALL 811
AVOID UTILITY DAMAGE

NORTH CAROLINA STATE LAW REQUIRES ANYONE PLANNING TO DISTURB THE SOIL, MUST PROVIDE ADVANCE NOTICE TO THE UNDERGROUND FACILITY OWNERS. THE NOTICE MUST BE AT LEAST TWO BUSINESS DAYS PRIOR TO ANY EXCAVATION BUT NO MORE THAN TEN BUSINESS DAYS.

THE AMERICAN PUBLIC WORKS ASSOCIATION UTILITY LOCATION & COORDINATION COUNCIL UNIFORM COLOR CODE IS:

RED – ELECTRICAL POWER LINES, CABLES, CONDUIT AND LIGHTING CABLES.

YELLOW – GAS, OIL, STEAM, PETROLEUM OR GASEOUS MATERIALS

ORANGE – COMMUNICATION, ALARM OR SIGNAL LINES, CABLES OR CONDUIT

BLUE – WATER, IRRIGATION AN SLURRY LINES

GREEN – SEWERS AND DRAIN LINES

PINK – TEMPORARY SURVEY MARKINGS.

OWNER & DEVELOPER
WATTS CHAPEL BAPTIST CHURCH

3703 TRYON ROAD
RALEIGH, NORTH CAROLINA 27606

CIVIL ENGINEER
RWK, PA

MAILING ADDRESS: P.O. BOX 444
101 W. MAIN STREET, SUITE 202
GARNER, NORTH CAROLINA 27529

LANDSCAPE ARCHITECT
ALISON A. POCKAT, ASLA

106 STEEPBANK DRIVE
CARY, NORTH CAROLINA 27518

Development SERVICES
FIRE • INSPECTIONS • PLANNING
PUBLIC UTILITIES • PUBLIC WORKS

Customer Service Center
One Exchange Plaza, Suite 400
Raleigh, North Carolina 27601
Phone 919-516-2495
Fax 919-516-2685

Preliminary Development Plan Application
When submitting plans, please check appropriate review type and include the Plan Checklist document.

Preliminary Approvals		FOR OFFICE USE ONLY
☒ Site Plans for Planning Commission or City Council ☐ Preliminary Administrative Site Plans ☐ Group Housing * ☐ Multifamily (infill)*	☐ Subdivision* ☐ Infill Subdivision* ☐ Infill Recombination* ☐ Cluster Subdivision ☐ Expedited Subdivision Review	Transaction Number
* May require Planning Commission or City Council Approval		

Section A

GENERAL INFORMATION			
Development Name Watts Chapel Baptist Church			
Proposed Use Worship & Office			
Property Address(es) 3703 Tryon Road, & 3801 Tryon Road, Raleigh, NC 27606			
Wake County Property Identification Number(s) for each parcel to which these guidelines will apply:			
P.I.N. 0782-96-6851	P.I.N. 0782-86-5855	P.I.N.	P.I.N.
What is your project type? ☐ Apartment ☐ Banks ☐ Elderly Facilities ☐ Hospitals ☐ Hotels/Motels ☐ Industrial Building ☐ Mixed Residential ☐ Non-Residential Condo ☐ Office ☒ Religious Institutions ☐ Residential Condo ☐ Retail ☐ School ☐ Shopping Center ☐ Single Family ☐ Telecommunication Tower ☐ Townhouse ☐ Other: If other, please describe:			
PRELIMINARY ADMINISTRATIVE REVIEW	Per City Code Section 10-2132.2, summarize the reason(s) this plan can be reviewed administratively not requiring Planning Commission or City Council approval.		
PLANNING COMMISSION OR CITY COUNCIL REVIEW	Per City Code Section 10-2132.2, summarize the reason(s) this plan requires Planning Commission or City Council Preliminary Approval. Vehicular surface area will increase more than 25% and is within 400' of residential district.		
CLIENT (Owner or Developer)	Company Watts Chapel Baptist Church Name (s) CHERELY SHORTER, Chair Trustee Ministry Address 3703 Tryon Road, Raleigh, NC 27606 Phone 919-828-7348 Email cs.horter@nc.rr.com Fax		
CONSULTANT (Contact Person for Plans)	Company RWK, PA Name (s) Chuck Piratzky Address 101 W. Main Street, Garner, NC 27529 Phone 919-779-4854 Email cpiratzky@nc.rr.com Fax 919-779-4056		

PRELIMINARY DEVELOPMENT PLAN APPLICATION | 02.28.11 1

DEVELOPMENT TYPE & SITE DATA TABLE (Applicable to all developments)	
Has your project previously been through the pre-submittal process? If yes, provide the transaction #	
Zoning Information	**Building Information**
Zoning District(s) RR	Proposed building use(s) Worship & Office
If more than one district, provide the acreage of each	Existing Building(s) sq. ft. gross 24,885
Overlay District WSOD	Proposed Building(s) sq. ft. gross
Total Site Acres 21.04 Inside City Limits ☒ Yes ☒ No	Total sq. ft. gross (existing & proposed) 24,885
Off street parking Required 116 Provided	Proposed height of building(s)
COA (Certificate of Appropriateness) case # N/A	FAR (floor area ratio percentage)
BOA (Board of Adjustment) case # A-N/A	Building Lot Coverage percentage (site plans only)
CUD (Conditional Use District) case # Z-N-A	
Stormwater Information	
Existing Impervious Surface 3.485acres/square feet	Flood Hazard Area ☒ Yes ☐ No
Proposed Impervious Surface 5.368 acres/square feet	If Yes, please provide
Neuse River Buffer ☒ Yes ☐ No Wetlands ☐ Yes ☒ No	Alluvial Soils X Flood Study FEMA Map Panel #
CONFORMITY WITH THE COMPREHENSIVE PLAN (Applicable to all developments)	
Provide a description of how your plan conforms to the guidelines of the Comprehensive Plan 2030	

FOR SUBDIVISIONS, MULTIFAMILY OR GROUP HOUSING PROJECTS ONLY	
1. Total # Of Townhouse Lots Detached Attached	11. Total number of Open Space (only) lots
2. Total # Of Single Family Lots	12. Total number of all lots
3. Total # of Apartment Or Condominium Units	13. Is your project a cluster unit development? ☐ Yes ☐ No
4. Total # Of Congregate Care Or Life Care Dwelling Units	If Yes, please answer the questions below:
5. Total # Of Mobile Home Lots	a) Total number of Townhouse Lots b) Total number of Single Family Lots
6. Total Number of Hotel Units	c) Total number of Group Housing Units
7. Overall Total # Of Dwelling Units (1-6 Above)	d) Total number of Open Space Lots
8. Bedroom Units 1br 2br 3br 4br or more	e) Minimum Lot Size f) Total Number of Phases
9. Overall Unit(s)/Acre Densities Per Zoning District(s)	g) Perimeter Protective Yard Provided ☐ Yes ☐ No
10. If your project is an infill subdivision, provide the infill calculations per City Code 10-3032 on the front cover of your drawing sets	h) Must provide open space quotient per City Code 10-3071 (5)

SIGNATURE BLOCK (Applicable to all developments)

In filing this plan as the property owner(s), I/we do hereby agree and firmly bind ourselves, my/our heirs, executors, administrators, successors and assigns jointly and severally to construct all improvements and make all dedications as shown on this proposed subdivision plan as approved by the City.

I hereby designate CHARLES HOLMES to serve as my agent regarding this application, to receive and respond to administrative comments, to resubmit plans on my behalf and to represent me in any public meeting regarding this application.

I/we have read, acknowledge and affirm that this project is conforming to all application requirements applicable with the proposed development use.

Signed _____ Date
Signed Cheryl Shorter 6/17/11 Date

PRELIMINARY DEVELOPMENT PLAN APPLICATION | 02.28.11 2

REV	DATE	REVISION	BY	CHK'D	APPROVED
1					
0	6-7-2011				

ALISON A.POCKAT, ASLA
LANDSCAPE ARCHITECT
LAND PLANNER
(919) 363-4415
106 STEEPBANK DRIVE
CARY, NC 27518

THIS DOCUMENT, TOGETHER WITH THE CONCEPTS AND DESIGNS PRESENTED HEREIN, AS AN INSTRUMENT OF SERVICES, IS INTENDED ONLY FOR THE SPECIFIC PURPOSE AND CLIENT FOR WHICH IT WAS PREPARED. REUSE OF AND IMPROPER RELIANCE ON THIS DOCUMENT WITHOUT WRITTEN AUTHORIZATION AND ADAPTATION BY RWK, PA SHALL BE WITHOUT LIABILITY TO RWK, PA.

RWK, PA
ENGINEERING - SURVEYING
CORPORATE LICENSE: C-1771
101 W. MAIN ST., SUITE 202
GARNER, NC 27529
PHONE: (919) 779-4854
FAX (919) 779-4056

SITE IMPROVEMENTS
WATTS CHAPEL BAPTIST CHURCH

PROJECT: WATTS CHAPEL BAPTIST CHURCH
3703 TRYON ROAD
RALEIGH, NORTH CAROLINA

PROJECT #:
DATE: 6-6-2011
DRAWN BY:
CHK'D BY:

SHEET NAME: COVER SHEET
SHEET NUMBER: CS

P:\WATTS\DESIGN\WATSBASE

LEGEND

AC	AIR CONDITIONING PAD
BFP	BACK FLOW PREVENTER
CI	CURB INLET
CO	SEWER CLEANOUT
ECM	EXISTING CONCRETE MONUMENT
EDH	EXISTING DRILL HOLE
EIS	EXISTING IRON STAKE
EIP	EXISTING IRON PIPE
EPK	EXISTING PK NAIL
EOP	EDGE OF PAVEMENT
BOC	BACK OF CURB
ES	ELECTRIC STUB
FES	FLARED END SECTION
HC	HANDICAPPED PARKING
LP	LIGHT POLE
MH	MANHOLE
NDH	NEW DRILL HOLE
NIP	NEW IRON PIPE
NPK	NEW PK NAIL
OHW	OVERHEAD WIRES
PNS	POINT NOT SET
RW	RIGHT OF WAY
TP	TELEPHONE PEDESTAL
TR	TRANSFORMER
TV	CABLE TV PEDESTAL
UP	UTILITY POLE
WM	WATER METER
WV	WATER VALVE
YI	YARD INLET
( )	FIELD MEASUREMENT

IMPERVIOUS SURFACE TABLE

GRAVEL	13,318 S.F.	0.306 AC
BUILDING	22,619 S.F.	0.519 AC
MISC CONC	5,082 SF.	0.117 AC
PARKING	111,126 S.F.	2.551 AC
TOTAL IMPERVIOUS	152,145 S.F.	3.493 AC

PERCENT IMPERVIOUS 16.6%

REFERENCES

B.O.M 1994 PG. 331
B.O.M 1998 PGS. 1345 & 1865
B.O.M 1999 PG. 875
B.O.M 2001 PG. 775

TOPO SHOWN IS FROM WAKE COUNTY GIS

WAKE COUNTY, NORTH CAROLINA

I CERTIFY THAT THIS MAP WAS DRAWN UNDER MY SUPERVISION FROM AN ACTUAL SURVEY MADE UNDER MY SUPERVISION FROM PUBLIC SOURCES REFERENCED; THAT THE RATIO OF PRECISION IS 1/10,000; AND THAT THIS MAP MEETS THE REQUIREMENTS OF THE STANDARDS OF PRACTICE FOR LAND SURVEYING IN NORTH CAROLINA (21 NCAC 56. 1600).

CHARLES R. PIRATZKY, P.L.S.
L-2813

9-30-2010
DATE

NORTH CAROLINA PROFESSIONAL SEAL L-2813 LAND SURVEYOR CHARLES R. PIRATZKY

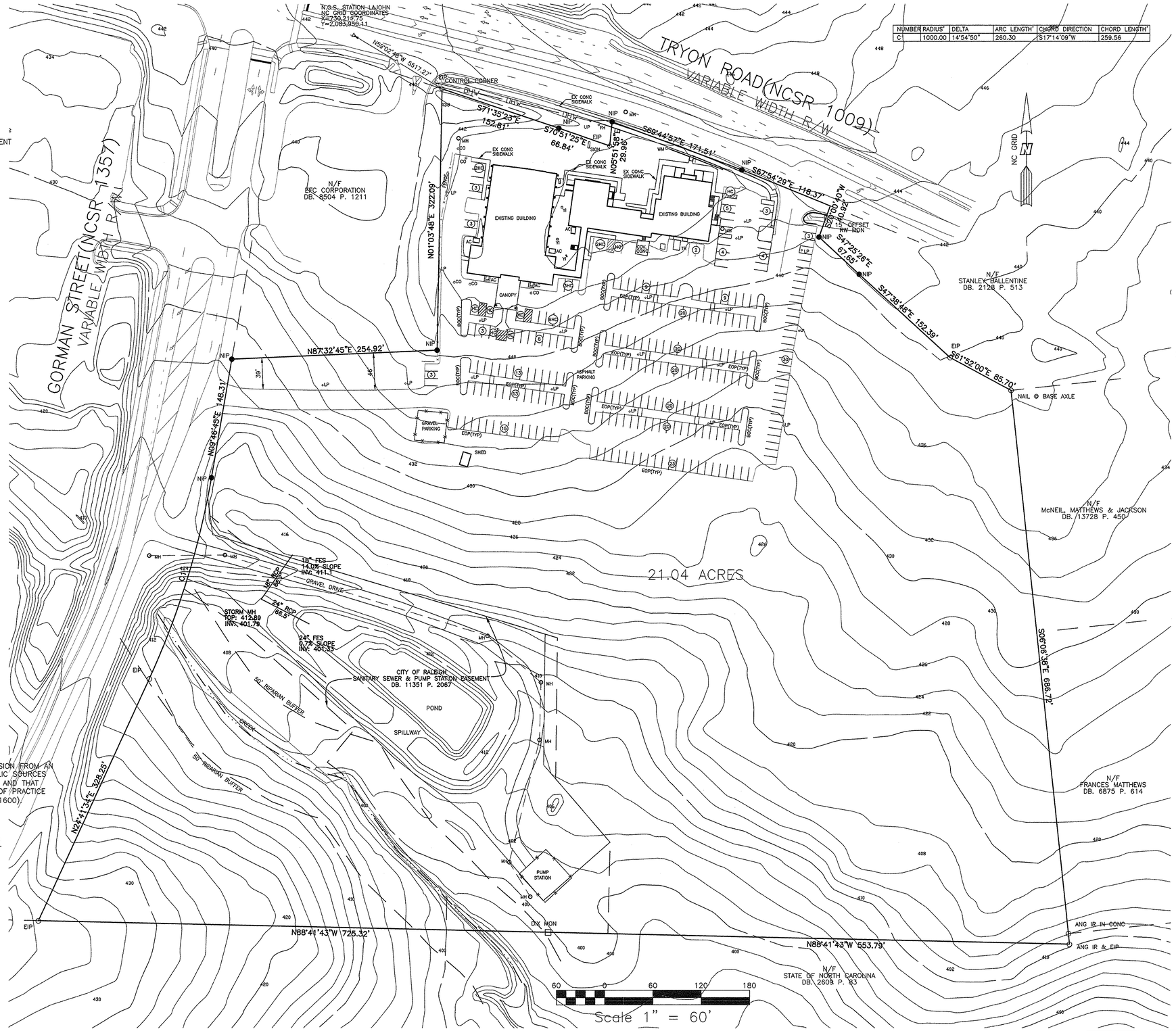

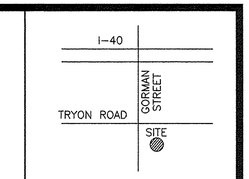

VICINITY MAP (NTS)

NUMBER	RADIUS'	DELTA	ARC LENGTH'	CHORD DIRECTION	CHORD LENGTH'
C1	1000.00	14°54'50"	260.30	S17°14'09"W	259.56

SITE INFORMATION

PIN NUMBERS
0782-96-0851 14.03 AC
0782386-5655 7.02 AC

SHEET NUMBER:
C1

EXISTING CONDITIONS

RWK, PA
ENGINEERING - SURVEYING
COMMERCIAL REAL ESTATE
10 CORPORATE CIRCLE, SUITE 202
GARNER, NC 27529
PHONE (919) 779-4884
FAX (919) 779-4026

SCALE: 1"=60' | File name: P:\WATTS\WATTS
FB: DS/DC | FIELD DATE: 8-23-2010
DATE: 9-29-10

BOUNDARY SURVEY
WATTS CHAPEL BAPTIST CHURCH
3703 TRYON ROAD
RALEIGH, WAKE COUNTY, NORTH CAROLINA

REVISIONS:
REV1: 11-30-2010
REV2: 11-30-2011

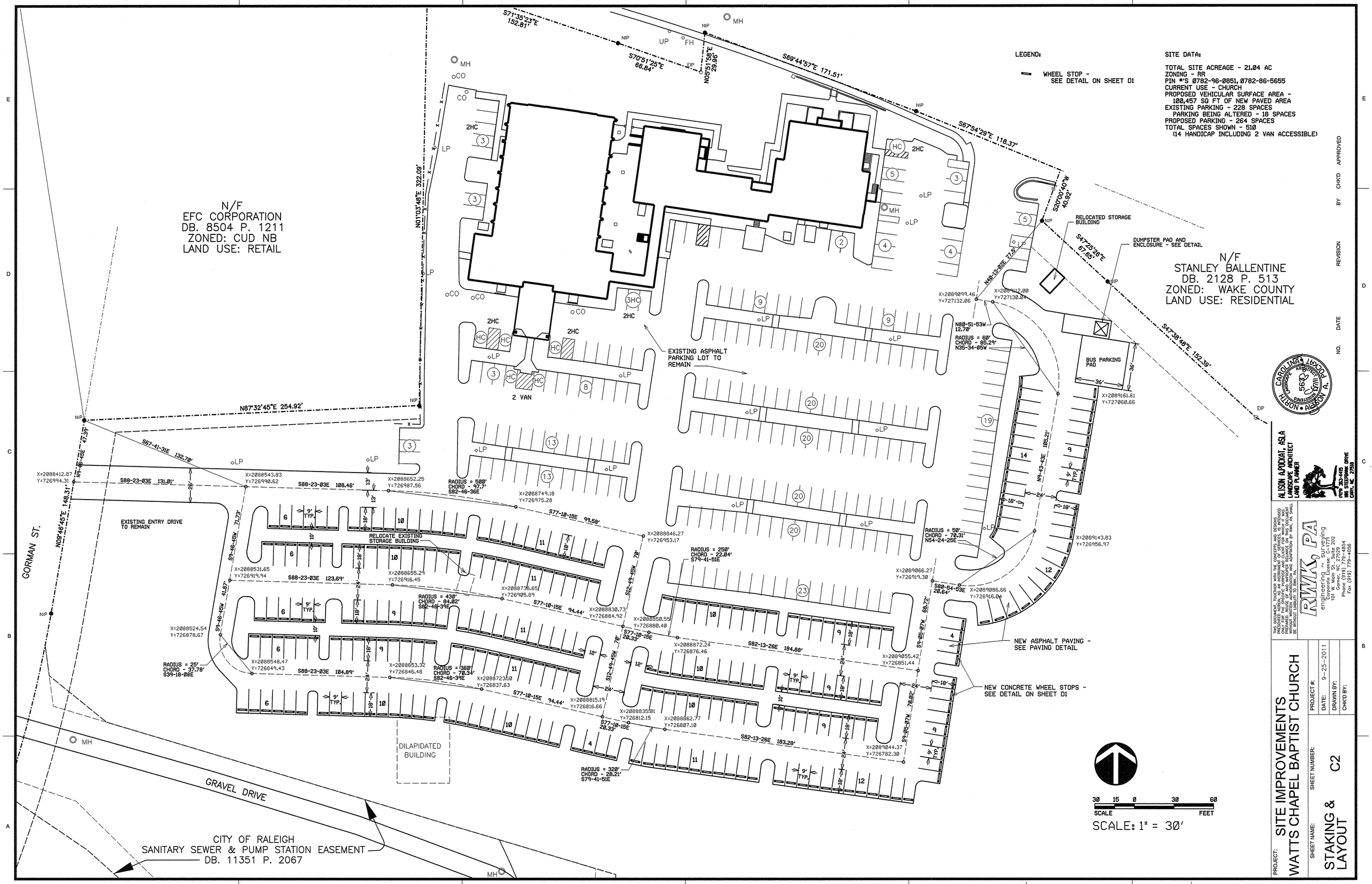

PROJECT: SITE IMPROVEMENTS WATTS CHAPEL BAPTIST CHURCH

SHEET NAME: STAKING & LAYOUT

SHEET NUMBER: C2

PROJECT #:

DATE: 9-25-2011

DRAWN BY:

CHK'D BY:

RWK, PA engineering ~ surveying
Corporate License: C-1771
101 W. Main St., Suite 202
Garner, NC 27529
Phone (919) 779-4854
Fax (919) 779-4056

ALISON A. POCKAT, ASLA
LANDSCAPE ARCHITECT
LAND PLANNER
1919 363-4415
1105 STEEPBANK DRIVE
CARY, NC 27518

NO. DATE REVISION BY CHK'D APPROVED

P:\WATTS\DESIGN\WATSBASE

BASIN 1 -
21,726 SQFT IMPACTED (0.5 AC)
.5 X 1800 = 900 CUFT STORAGE
900 / 1.2 = 750 SQFT SURFACE AREA
BASIN SIZE = 22.5' X 34' X 3'
SKIMMER OUTLET ELEV. = 426.5
SKIMMER ORIFICE SIZE = 1.5"

BASIN 2 -
41,759 SQFT IMPACTED (0.96 AC)
.96 X 1800 = 1728 CUFT STORAGE
1728 / 1.2 = 1400 SQFT SURFACE AREA
BASIN SIZE = 31' X 47' X 3'
SKIMMER OUTLET ELEV. = 421.0
SKIMMER ORIFICE SIZE = 1.5"

BASIN 3 -
61,463 SQFT IMPACTED (1.41 AC)
1.41 X 1800 = 2540 CUFT STORAGE
2540 / 1.2 = 2117 SQFT SURFACE AREA
BASIN SIZE = 38' X 56' X 3'
SKIMMER OUTLET ELEV. = 415.0
SKIMMER ORIFICE SIZE = 1.5"

TOTAL DISTURBED AREA = 4.81 ACRES
ALL SOILS ON SITE ARE APPLING AND CECIL

LEGEND:

— x — SILT FENCE / TREE PROTECTION FENCE (LIMIT OF DISTURBANCE)

DIVERSION DITCH

TEMPORARY SEDIMENT TRAP

— — x — — TREE PROTECTION FENCE (LIMIT OF DISTURBANCE)

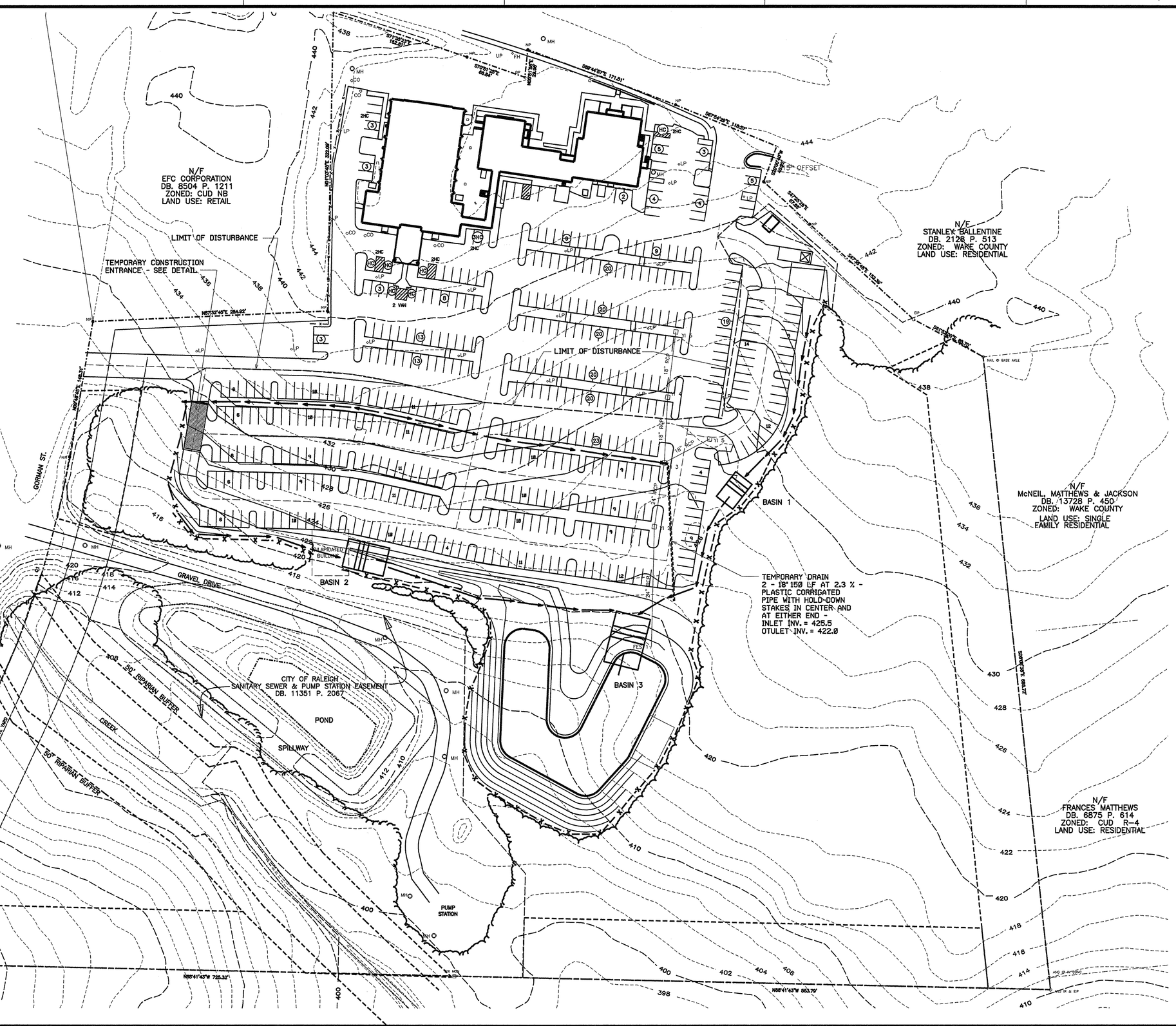

NO. DATE REVISION BY CHK'D APPROVED

NORTH CAROLINA REGISTERED LANDSCAPE ARCHITECT 563 ALISON A. APPOCAT

ALISON APPOCAT, ASLA
LANDSCAPE ARCHITECT
LAND PLANNER
PHONE 303-4415
1805 STEEPBANK DRIVE
CARY, NC 27518

THIS DOCUMENT, TOGETHER WITH THE CONCEPTS AND DESIGNS PRESENTED HEREIN, AS AN INSTRUMENT OF SERVICE, IS INTENDED ONLY FOR THE SPECIFIC PURPOSE AND CLIENT FOR WHICH IT WAS PREPARED. REUSE OF AND IMPROVEMENTS TO THE PROPERTY BY OTHERS WITHOUT WRITTEN AUTHORIZATION AND ADAPTATION BY RWK, PA SHALL BE WITHOUT LIABILITY TO RWK, PA.

RWK, PA
engineering ~ surveying
Corporate License: C-1721
1101 Kildaire Farm Rd., Suite 11
Garner, NC 27529
Phone (919) 779-4854
Fax (919) 779-4055

PROJECT: SITE IMPROVEMENTS
WATTS CHAPEL BAPTIST CHURCH

SHEET NAME: EROSION CONTROL

SHEET NUMBER: C3

PROJECT #:
DATE: 9-25-2011
DRAWN BY:
CHK'D BY:

P:\WATTS\DESIGN\WATSBASE

CONSTRUCTION SEQUENCE:

1. OBTAIN GRADING PERMIT.
2. INSTALL TREE PROTECTION FENCING.
3. INSTALL GRAVEL CONSTRUCTION ENTRANCES, TEMPORARY DIVERSIONS, SILT FENCING AND SEDIMENT BASINS AS SHOWN ON THE PLAN. CLEAR ONLY AS NECESSARY TO INSTALL THESE DEVICES. PROTECT ALL EXISTING VEGETATION TO REMAIN IN PLACE.
4. CALL CITY, 996-3940, FOR ON-SITE INSPECTION BY CITY CONSERVATION INSPECTOR. IF APPROVED, BEGIN CLEARING AND GRUBBING.
5. MAINTAIN DEVICES AS NEEDED. ROUGH GRADE THE SITE.
6. INSTALL THE STORM SEWER AND PROTECT INLETS WITH SILT FENCING, SILT TRAPS OR INLET PROTECTION AS INDICATED ON THE PLAN. BEGIN CONSTRUCTION OF THE STRUCTURES.
7. STABILIZE THE SITE AS AREAS ARE BROUGHT UP TO THE FINISHED GRADE WITH VEGETATION, PAVING, MULCH OR STRUCTURES.
8. WHEN CONSTRUCTION IS COMPLETE AND ALL AREAS ARE STABILIZED COMPLETELY, CALL TIM LYLES FOR AN INSPECTION.
9. IF THE SITE IS APPROVED, REMOVE TEMPORARY DIVERSIONS, SILT FENCING, SEDIMENT BASINS, ETC., AND SEED, OR PAVE ANY RESULTING BARE AREAS.
10. WHEN VEGETATION HAS BECOME ESTABLISHED, CALL CITY (996-3940) FOR A FINAL SITE INSPECTION.

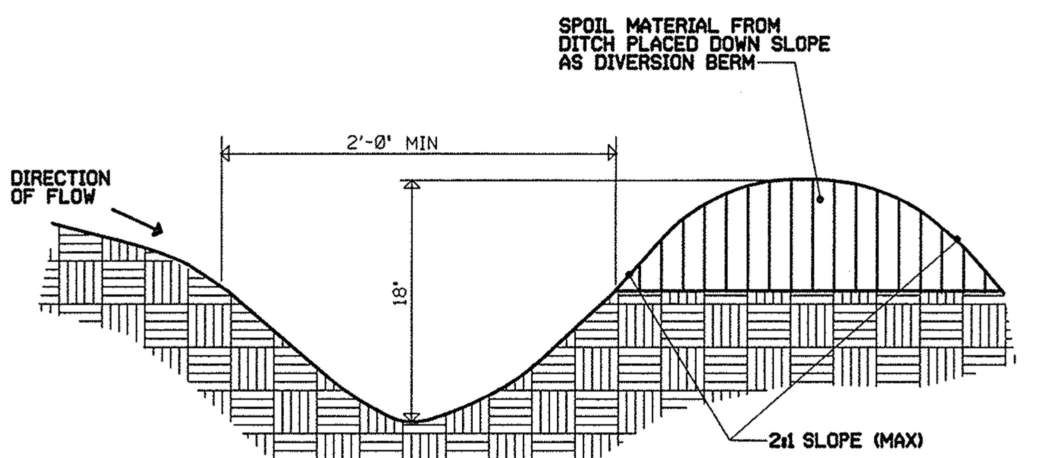

CROSS SECTION

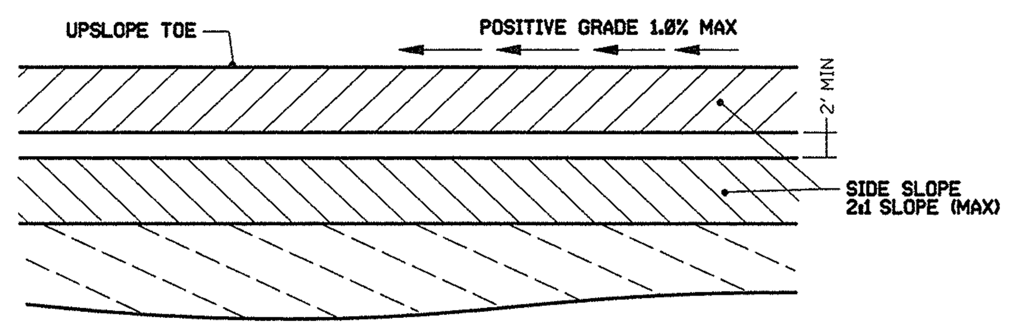

PLAN VIEW

NOTE:

DIVERSION DITCHES ARE TO BE INSTALLED AT THE END OF EACH WORKING DAY OR IMMEDIATELY PRIOR TO ANY IMMINENT STORM INCIDENT.

DIMENSIONS ARE MINIMUM & SHOULD BE INCREASED AS NEEDED.

STABILIZE DIVERSION DITCH WITH TEMPORARY SEEDING AND EROSION CONTROL NETTING

DIVERSION DITCH
NTS

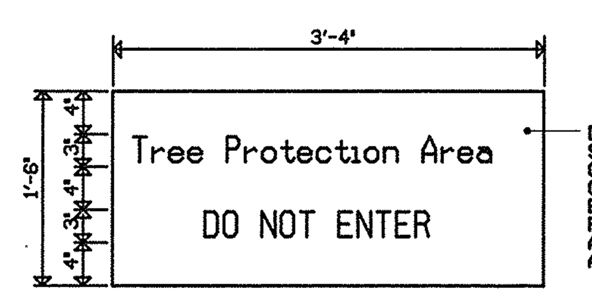

SIGN DETAIL

* FOR REPAIR OF SILT FENCE FAILURES, USE NO. 57 WASHED STONE. FOR ANCHOR WHEN SILT FENCE IS PROTECTING CATCH BASIN.

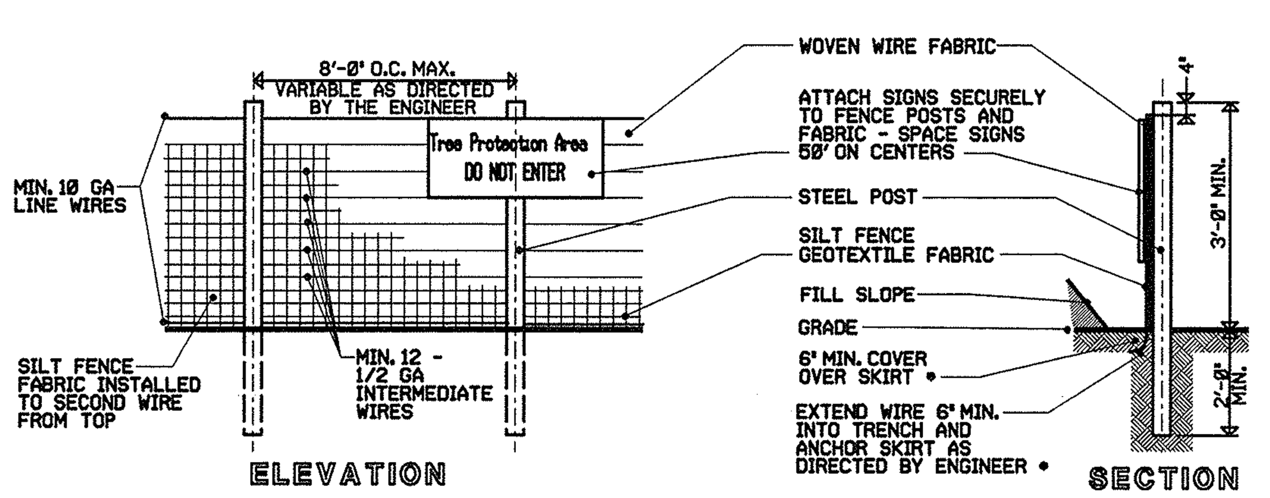

ELEVATION

SECTION

NOTES:
WARNING SIGNS TO BE MADE OF DURABLE, WEATHERPROOF MATERIAL
LETTERS TO BE 3" HIGH MINIMUM, CLEARLY LEGIBLE AND SPACED AS DETAILED.
SIGNS SHALL BE PLACED AT 50' MAXIMUM INTERVALS.
PLACE A SIGN AT EACH END OF LINEAR TREE PROTECTION AND 50' ON CENTER THEREAFTER.
FOR TREE PROTECTION AREAS LESS THAN 200' IN PERIMETER, PROVIDE NO LESS THAN ONE SIGN PER PROTECTION AREA.
ATTACH SIGNS SECURELY TO FENCE POSTS AND FABRIC.
MAINTAIN TREE PROTECTION FENCE THROUGHOUT DURATION OF PROJECT.
ADDITIONAL SIGNS MAY BE REQUIRED BY CITY OF RALEIGH INSPECTIONS DEPARTMENT BASED ON ACTUAL FIELD CONDITIONS.
PLACE A SIGN AT EACH END OF LINEAR TREE PROTECTION AND 50' ON CENTER THEREAFTER.
USE SILT FENCE ONLY WHEN DRAINAGE AREA DOES NOT EXCEED 1/4 ACRE AND NEVER IN AREAS OF CONCENTRATED FLOW.
END OF SILT FENCE NEEDS TO BE TURNED UPHILL.
INSTALL TREE PROTECTION / SILT FENCE PRIOR TO ANY CLEARING, GRADING &/OR CONSTRUCTION.

TEMPORARY SILT FENCE / TREE PROTECTION FENCE
NTS

TEMPORARY SEEDING SCHEDULE

SHOULDERS, SIDE DITCHES SLOPES (MAX. 3:1)

DATE:	TYPE:	PLANTING RATE:
AUG. 15-NOV. 1	TALL FESCUE	300 LBS./ACRE
NOV. 1-MAR.1	TALL FESCUE	300 LBS./ACRE
	& ABRUZZI RYE	25 LBS./ACRE
MAR.1-APR.15	TALL FESCUE	300 LBS./ACRE
APR.15-JUN.30	HULLED COMMON BERMUDA	25 LBS./ACRE
JUL.1-AUG.15	TALL FESCUE AND	120 LBS./ACRE
	***BROWNTOP MILLET	35 LBS./ACRE
	***OR SORGHUM-SUDAN HYBRIDS	30 LBS./ACRE

SLOPES (3:1 TO 2:1)

MAR.1-JUNE 1	SERICEA LESPEDEZA (SCARIFIED)	50 LBS./ACRE
	&	
(MAR.1-APR.15)	ADD TALL FESCUE	120 LBS./ACRE
(MAR.1-JUN.30)	OR ADD WEEPING LOVEGRASS	10 LBS./ACRE
(MAR.1-JUN.30)	OR ADD HULLED COMMON BERMUDAGRASS	25 LBS./ACRE
JUN.1-SEP.1	***TALL FESCUE AND	120 LBS./ACRE
	***BROWNTOP MILLET	35 LBS./ACRE
	***OR SORGHUM-SUDAN HYBRIDS	30 LBS./ACRE
SEP.1-MAR.1	SERICEA LESPEDEZA (UNHULLED-UNSCARIFIED)	70 LBS./ACRE
	AND TALL FESCUE	120 LBS./ACRE
(NOV.1-MAR.1)	ADD ABRUZZI RYE	25 LBS./ACRE

CONSULT CONSERVATION ENGINEER OR SOIL CONSERVATION SERVICE FOR ADDITIONAL INFORMATION CONCERNING OTHER ALTERNATIVES FOR VEGETATION OF DENUDED AREAS. THE ABOVE VEGETATION RATES ARE THOSE WHICH DO WELL UNDER LOCAL CONDITIONS; OTHER SEEDING RATE COMBINATIONS ARE POSSIBLE.

***TEMPORARY - RESEED ACCORDING TO OPTIMUM SEASON FOR DESIRED PERMANENT VEGETATION. DO NOT ALLOW TEMPORARY COVER TO GROW OVER 12" IN HEIGHT BEFORE MOWING, OTHERWISE FESCUE MAY BE SHADED OUT.

SEEDBED PREPARATION

1. CHISEL COMPACTED AREAS AND SPREAD TOPSOILTHREE INCHES DEEP OVER ADVERSE SOIL CONDITIONS, IF AVAILABLE.
2. RIP THE ENTIRE AREA TO FOUR INCHES DEPTH
3. REMOVE ALL LOOSE ROCK, ROOTS, AND OTHER OBSTRUCTIONS LEAVING SURFACE REASONABLY SMOOTH AND UNIFORM.
4. APPLY AGRICULTURAL LIME AND FERTILIZER UNIFORMLY AND MIX WITH SOIL (SEE BELOW *).
5. CONTINUE TILLAGE UNTIL A WELL-PULVERIZED, FIRM, REASONABLY UNIFORM SEEDBED IS PREPARED FOUR INCHES DEEP.
6. SEED ON A FRESHLYPREPARED SEEDBED AND COVER SEED LIGHTLY WITH SEEDING EQUIPMENT OR CULTIPACK AFTER SEEDING.
7. MULCH IMMEDIATELY AFTER SEEDING AND ANCHOR MULCH.
8. INSPECT ALL SEEDED AREAS AND MAKE NECESSARY REPAIRS OR RESEEDINGS WITHIN THE PLANTING SEASON, IF POSSIBLE. IF STAND SHOULD BE OVER 60% DAMAGED, RE-ESTABLISH FOLLOWING ORIGINAL LIME, FERTILIZER AND SEEDING RATES.
9. CONSULT CONSERVATION INSPECTOR ON MAINTENANCE TREATMENT AND FERTILIZATION AFTER PERMANENT COVER IS ESTABLISHED.

* APPLY: AGRICULTURAL LIMESTONE - FERTILIZER - MULCH - ANCHOR -

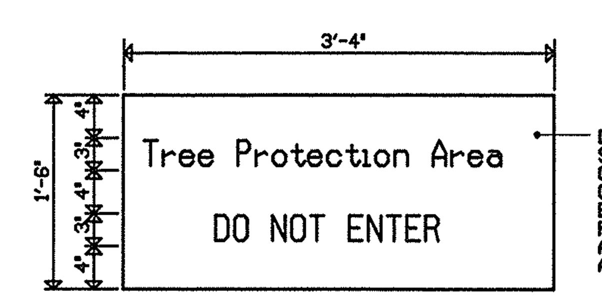

SIGN DETAIL

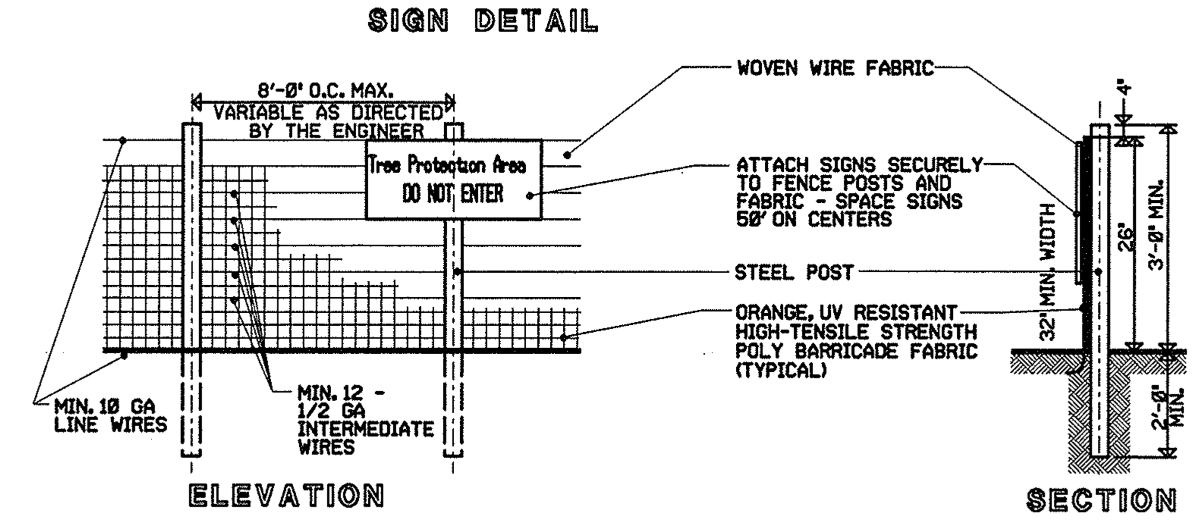

ELEVATION

SECTION

NOTES:
WARNING SIGNS TO BE MADE OF DURABLE, WEATHERPROOF MATERIAL
LETTERS TO BE 3" HIGH MINIMUM, CLEARLY LEGIBLE AND SPACED AS DETAILED.
SIGNS SHALL BE PLACED AT 50' MAXIMUM INTERVALS.
PLACE A SIGN AT EACH END OF LINEAR TREE PROTECTION AND 50' ON CENTER THEREAFTER.
FOR TREE PROTECTION AREAS LESS THAN 200' IN PERIMETER, PROVIDE NO LESS THAN ONE SIGN PER PROTECTION AREA.
ATTACH SIGNS SECURELY TO FENCE POSTS AND FABRIC.
MAINTAIN TREE PROTECTION FENCE THROUGHOUT DURATION OF PROJECT.
ADDITIONAL SIGNS MAY BE REQUIRED BY CITY OF RALEIGH INSPECTIONS DEPARTMENT BASED ON ACTUAL FIELD CONDITIONS.
PLACE A SIGN AT EACH END OF LINEAR TREE PROTECTION AND 50' ON CENTER THEREAFTER.
INSTALL TREE PROTECTION FENCE PRIOR TO ANY CLEARING, GRADING &/OR CONSTRUCTION.

NOTE: FOR TREE PROTECTION ONLY

TREE PROTECTION FENCE
NTS

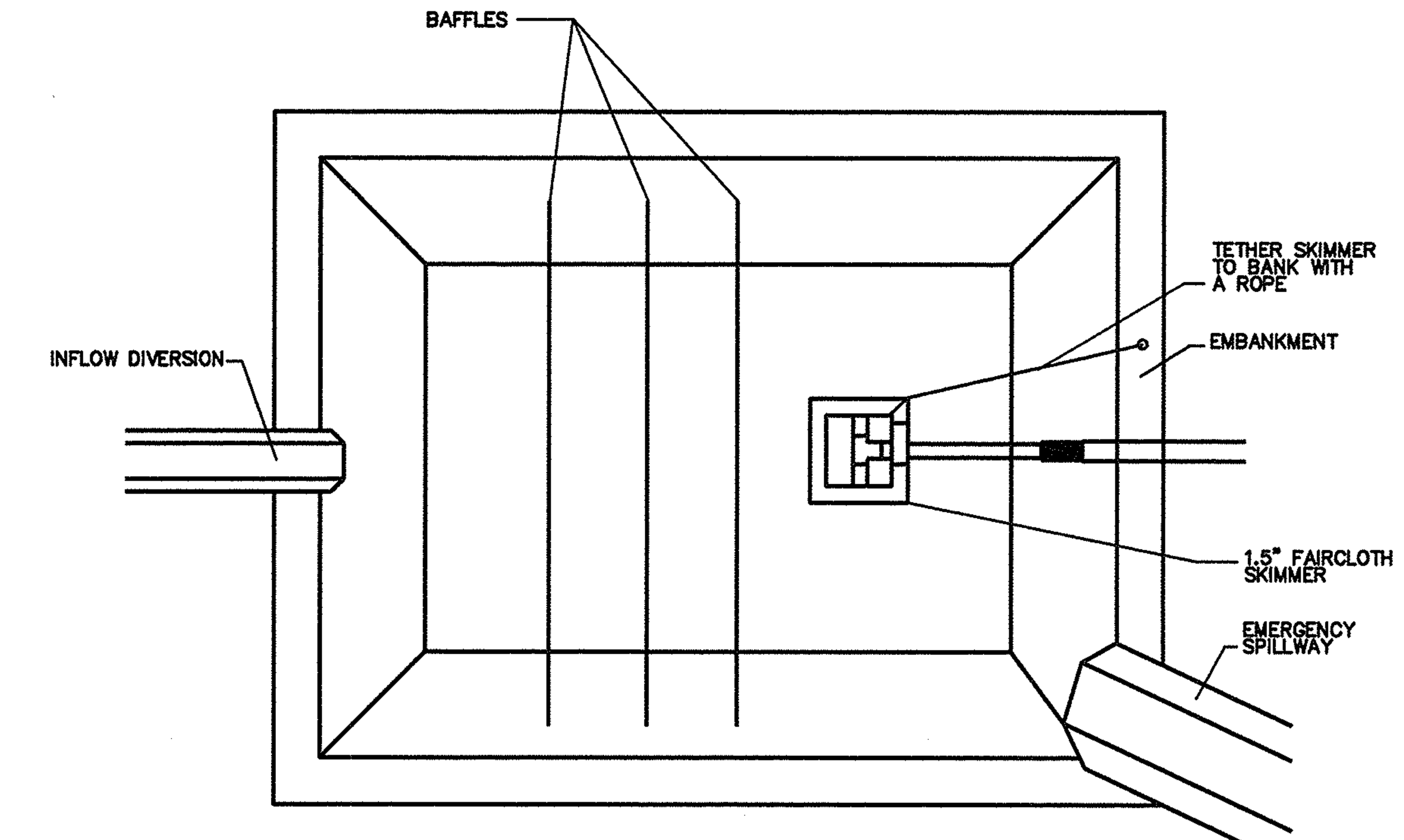

PLAN VIEW NTS

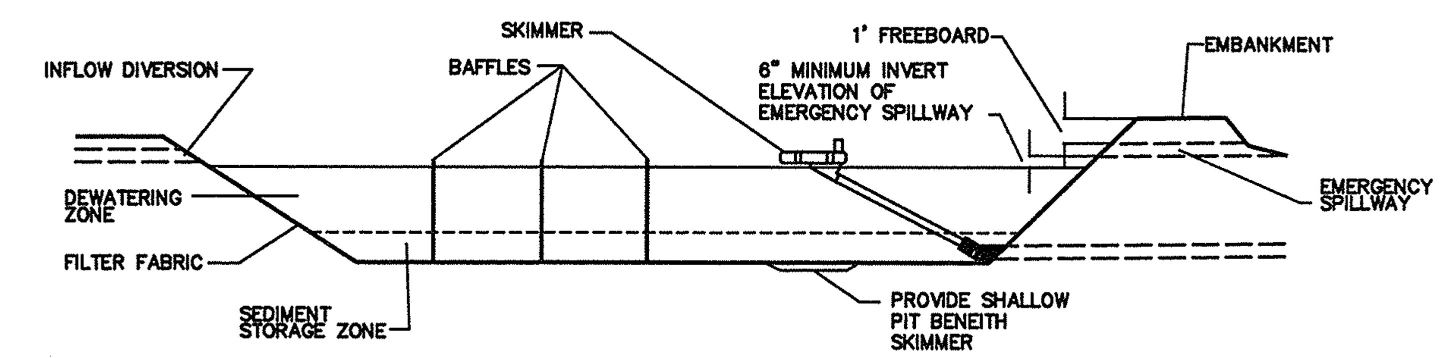

CROSS SECTION VIEW NTS

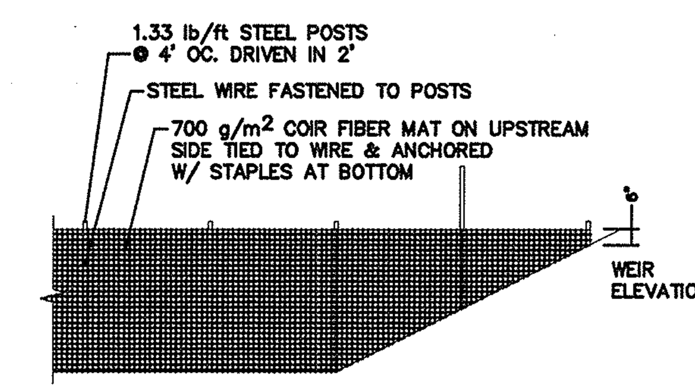

BAFFLE DETAIL

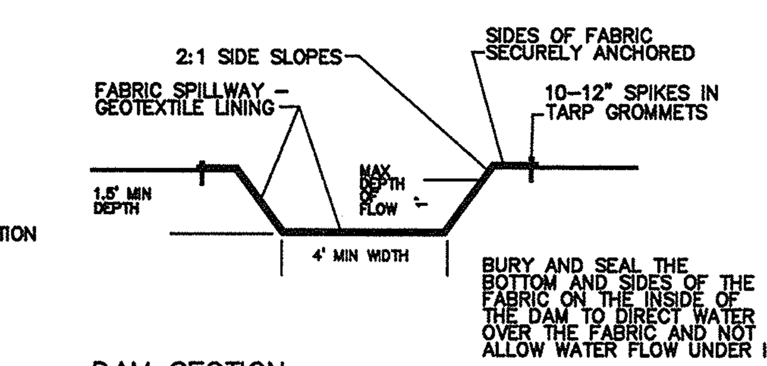

DAM SECTION

NOTES :
1. USE FOR DRAINAGE AREAS NOT EXCEEDING 5 ACRES.
2. EARTH BERM SHALL BE STABILIZED W/ SEEDING ACCORDING TO TRIANGLE SPECIFICATIONS.
3. USE CLEAN COMPACTOR FILL MATERIAL FOR EARTH BERM.
4. FABRIC WIDTH MUST COVER THE BOTTOM AND SIDES AND LAP ONTO THE TOP OF THE DAM IN ONE CONTINUOUS PIECE WITHOUT SPLICES. FABRIC LENGTH MUST EXTEND TO UNDISTURBED GROUND BELOW THE DAM BUT CAN BE SPLICED WITH AN OVERLAP OF THE TOP PIECE OVER THE BOTTOM.
5. SKIMMER SIZING AND ORIFICE SIZING IS BASED ON THE USE OF A FAIRCLOTH SKIMMER. (AVAILABLE FROM: J. W. FAIRCLOTH & SON, P.O. BOX 757, HILLSBOROUGH, NC 27278 PHONE NUMBER 919-732-1266). CONTACT THE LANDSCAPE ARCHITECT FOR REVISED SIZES IF AN ALTERNATIVE SKIMMER IS TO BE USED.

MAINTENANCE:
INSPECT TEMPORARY SEDIMENT TRAPS AFTER EACH PERIOD OF SIGNIFICANT RAINFALL. REMOVE SEDIMENT AND RESTORE TRAP TO ITS ORIGINAL DIMENSIONS WHEN SEDIMENT HAS ACCUMULATED TO ½ OF THE DESIGN DEPTH OF THE TRAP. PLACE THE SEDIMENT THAT IS REMOVED IN A DESIGNATED DISPOSAL AREA AND REPLACE THE CONTAMINATED PART OF THE GRAVEL FACING.
CHECK THE STRUCTURE FOR DAMAGE FROM EROSION OR PIPING. PERIODICALLY CHECK THE DEPTH OF THE SPILLWAY TO ENSURE THAT IT IS A MINIMUM OF 1.5' BELOW THE LOW POINT OF THE ENBANKMENT. IMMEDIATELY FILL ANY SETTLEMENT OF THE ENBANKMENT TO SLIGHTLY ABOVE THE DESIGN GRADE. ANY RIP RAP DISPLACED BELOW THE SPILLWAY MUST BE REPLACED IMMEDIATELY.
STABILIZE THE ENBANKMENT AND ALL DISTURBED AREAS ABOVE THE SEDIMENT POOL AND DOWNSTREAM FROM THE TRAP IMMEDIATELY AFTER CONSTRUCTION WITH SEEDING.

TEMPORARY SEDIMENT TRAP WITH SKIMMER
NTS

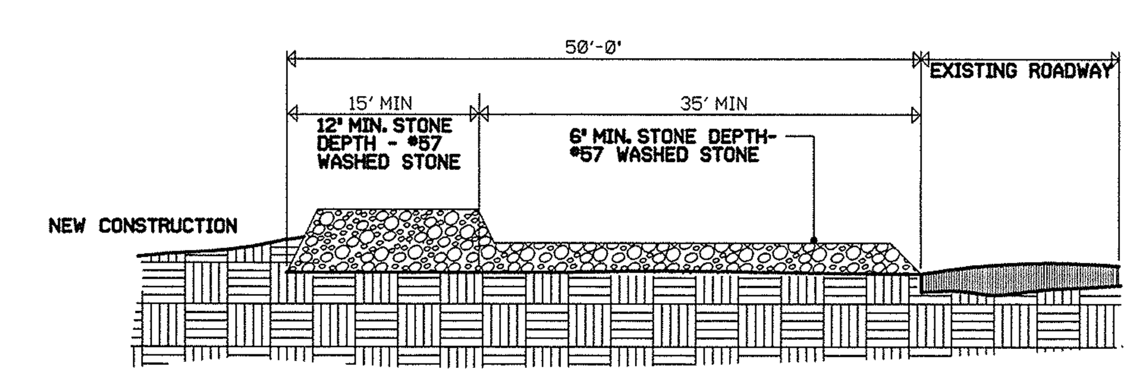

NOTE:
1. THE MINIMUM WIDTH OF THE CONSTRUCTION ENTRANCE IS TO BE 25' OR THE WIDTH OF THE PROPOSED DRIVEWAY, WHICHEVER IS GREATER.
2. SEE PLAN FOR THE ACTUAL WIDTH.
3. THE ENTRANCE MUST BE MAINTAINED TO PREVENT SEDIMENT FROM BEING DEPOSITED ON THE PUBLIC RIGHT OF WAY.
4. PERIODIC WASHING OF TOP DRESSING MAY BE REQUIRED

TEMPORARY CONSTRUCTION ENTRANCE
NTS

NO. DATE REVISION BY CHK'D APPROVED

NORTH CAROLINA REGISTERED LANDSCAPE ARCHITECT 563 ALISON A. POCKAT 11/07/11

ALISON A.POCKAT, ASLA
LANDSCAPE ARCHITECT
LAND PLANNER
(919) 363-4415
106 STEEPBANK DRIVE
CARY, NC 27518

THIS DOCUMENT, TOGETHER WITH THE CONCEPTS AND DESIGNS PRESENTED HEREIN, AS AN INSTRUMENT OF SERVICES, IS INTENDED ONLY FOR THE SPECIFIC PURPOSE AND CLIENT FOR WHICH IT WAS PREPARED. REUSE OF AND IMPROPER RELIANCE ON THIS DOCUMENT WITHOUT WRITTEN AUTHORIZATION AND ADAPTATION BY RWK, PA SHALL BE WITHOUT LIABILITY TO RWK, PA.

RWK, PA
engineering ~ surveying
Corporate License: C-1771
101 W. Main St., Suite 202
Garner, NC 27529
Phone (919) 779-4854
Fax (919) 779-4056

PROJECT: SITE IMPROVEMENTS WATTS CHAPEL BAPTIST CHURCH

PROJECT #:	
DATE:	9-25-2011
DRAWN BY:	
CHK'D BY:	

SHEET NAME: EROSION DETAILS

SHEET NUMBER: C3.D

P:\WATTS\DESIGN\WATSBASE

PRIMARY TREE CONSERVATION AREA A

NUMBER	DIRECTION	DISTANCE
TC L1	S37°47'25"E	91.52'
TC L2	S49°00'33"E	174.28'
TC L3	N75°22'05"E	20.06'
TC L4	N89°27'55"E	15.82'
TC L5	S29°04'52"E	51.37'
TC L6	S37°45'27"E	94.29'
TC L7	S45°21'45"E	85.27'
TC L8	S46°56'58"E	107.41'
TC L9	N88°41'43"W	30.04'
TC L10	N46°56'58"W	85.27'
TC L11	N45°21'45"W	86.84'
TC L12	N38°00'08"W	90.92'
TC L13	N29°47'28"W	46.92'
TC L14	S77°22'56"W	29.88'
TC L15	N49°00'33"W	186.35'
TC L16	N37°47'25"W	79.84'

PRIMARY TREE CONSERVATION AREA B

NUMBER	DIRECTION	DISTANCE
TC L17	S88°41'43"E	29.61'
TC L18	N46°33'26"W	12.77'
TC L19	N45°41'58"W	91.27'
TC L20	N38°54'07"W	100.46'
TC L21	S73°53'37"W	11.25'
TC L22	N53°16'26"W	228.26'
TC L23	N30°03'28"W	47.14'
TC L24	S24°41'34"W	7.84'
TC L26	S53°16'26"E	242.30'
TC L27	S43°27'10"E	80.42'
TC L28	S45°25'56"E	94.84'

SECONDARY TREE CONSERVATION AREA A

NUMBER	DIRECTION	DISTANCE
TC L29	S06°06'38"E	686.72'
TC L30	N88°41'43"W	67.42'
TC L31	N04°29'11"W	65.33'
TC L32	N06°06'38"W	578.33'
TC L33	N61°52'00"W	55.02'
TC L34	N65°20'39"E	81.62'
TC L35	S61°52'00"E	40.05'

SECONDARY TREE CONSERVATION AREA B

NUMBER	DIRECTION	DISTANCE
TC L31	N04°29'11"W	65.33'
TC L36	N88°41'43"W	498.35'
TC L37	S01°18'42"W	65.00'
TC L38	S88°41'43"E	504.95'

SECONDARY TREE CONSERVATION AREA C

NUMBER	DIRECTION	DISTANCE
TC L28	S45°25'56"E	94.84'
TC L40	S88°41'43"E	372.38'
TC L43	N88°41'43"W	469.56'
TC L44	N24°41'34"E	70.82'

SECONDARY TREE CONSERVATION AREA D STREET YARD

NUMBER	DIRECTION	DISTANCE
TC L45	N09°46'45"E	72.32'
TC L46	N89°14'10"E	66.12'
TC L47	S09°46'45"W	84.42'
TC L48	N76°20'41"W	65.00'

TREE CONSERVATION AREA TIES

NUMBER	DIRECTION	DISTANCE
TC L49	N24°41'34"E	249.59'
TC L50	N09°46'45"E	75.99'
TC L51	S15°26'33"W	62.37'

PRIMARY TREE CONSERVATION AREA B

NUMBER	RADIUS '	DELTA	ARC LENGTH '	CHORD DIRECTION	CHORD LENGTH '
TC C1	1000.02	00°57'36"	16.75	N24°12'46"E	16.75

PRIMARY TREE CONSERVATION AREA A

NUMBER	RADIUS '	DELTA	ARC LENGTH '	CHORD DIRECTION	CHORD LENGTH '
TC C2	1000.02	01°23'13"	24.21	N17°55'23"E	24.21
TC C3	1065.00	03°52'35"	72.05	S11°43'02"W	72.04
TC C4	1000.02	03°52'35"	67.66	N11°43'02"E	67.64

EXISTING ACCESS EASEMENT

NUMBER	DIRECTION	DISTANCE
EAE1	S07°42'57"E	22.83'
EAE2	S51°12'11"E	56.09'
EAE3	S73°24'16"E	90.49'
EAE4	S73°24'16"E	297.64'
EAE5	S73°24'16"E	15.88'
EAE6	S00°38'54"W	174.10'
EAE7	S40°58'43"E	103.15'
EAE8	S01°18'17"W	112.68'
EAE9	N88°41'43"W	200.95'
EAE10	N01°18'17"E	40.55'
EAE11	N45°00'43"W	42.82'
EAE12	N41°52'32"W	70.35'
EAE13	N37°36'43"W	37.36'
EAE14	N37°11'09"W	51.24'
EAE15	N53°55'15"W	21.67'
EAE16	N39°29'03"E	50.95'
EAE17	N48°13'22"W	199.87'
EAE18	N55°57'55"W	73.88'

PROPOSED ACCESS EASEMENT

NUMBER	DIRECTION	DISTANCE
PAE1	N19°49'59"E	35.07'
PAE2	S88°23'03"E	115.79'
PAE3	S84°38'24"E	43.31'
PAE4	S77°27'28"E	133.67'
PAE5	S81°49'51"E	300.07'
PAE6	S08°10'09"W	110.51'
PAE7	S31°06'14"W	196.51'
PAE8	S81°09'42"W	116.31'
PAE9	N40°58'43"W	103.15'
PAE10	N00°38'54"E	174.10'
PAE11	N73°24'16"W	15.88'
PAE12	N73°24'16"W	297.64'

NUMBER	RADIUS '	DELTA	ARC LENGTH '	CHORD DIRECTION	CHORD LENGTH '
EAE C1	1000.00	06°41'31"	116.80	N14°32'37"E	116.73

60 0 60 120 180

Scale 1" = 60'

NUMBER	RADIUS'	DELTA	ARC LENGTH'	CHORD DIRECTION	CHORD LENGTH'
C1	1000.00	14°54'50"	260.30	S17°14'09"W	259.56

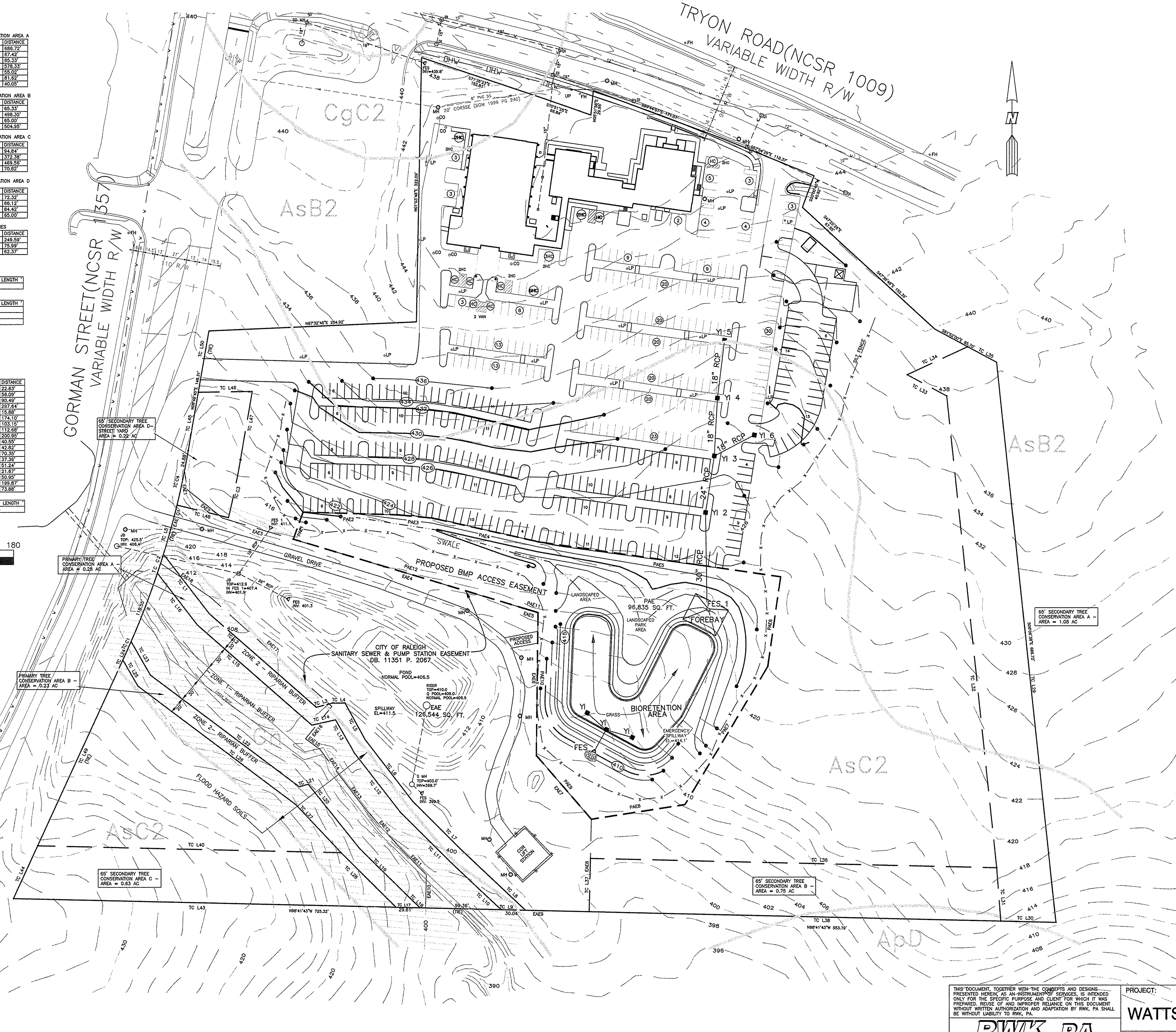

LEGEND

AC	AIR CONDITIONING PAD
BFP	BACK FLOW PREVENTER
CI	CURB INLET
CO	SEWER CLEANOUT
ECM	EXISTING CONCRETE MONUMENT
EDH	EXISTING DRILL HOLE
EIS	EXISTING IRON STAKE
EIP	EXISTING IRON PIPE
EPK	EXISTING PK NAIL
EOP	EDGE OF PAVEMENT
BOC	BACK OF CURB
ES	ELECTRIC STUB
FES	FLARED END SECTION
HC	HANDICAPPED PARKING
LP	LIGHT POLE
MH	EXISTING MANHOLE
NDH	NEW DRILL HOLE
NIP	NEW IRON PIPE
NPK	NEW PK NAIL
OHW	OVERHEAD WIRES
PNS	POINT NOT SET
RW	RIGHT OF WAY
TP	TELEPHONE PEDESTAL
TR	TRANSFORMER
TV	CABLE TV PEDESTAL
UP	UTILITY POLE
WM	WATER METER
WV	WATER VALVE
YI	YARD INLET
( )	FIELD MEASUREMENT

IMPERVIOUS SURFACE TABLE

BUILDING	24,885 S.F.	0.571 AC
PARKING	217,631 S.F.	4.996 AC
TOTAL IMPERVIOUS	242,516 S.F.	5.567 AC

PERCENT IMPERVIOUS 26.5%

SITE INFORMATION

PIN NUMBERS
0782-96-0851 14.03 AC
0782386-5655 7.02 AC

NORTH CAROLINA PROFESSIONAL SEAL 026395 ENGINEER CHARLES R. PIRATZKY
11-30-11

THIS DOCUMENT, TOGETHER WITH THE CONCEPTS AND DESIGNS PRESENTED HEREIN, AS AN INSTRUMENT OF SERVICES, IS INTENDED ONLY FOR THE SPECIFIC PURPOSE AND CLIENT FOR WHICH IT WAS PREPARED. REUSE OF AND IMPROPER RELIANCE ON THIS DOCUMENT WITHOUT WRITTEN AUTHORIZATION AND ADAPTATION BY RWK, PA SHALL BE WITHOUT LIABILITY TO RWK, PA.

RWK, PA
ENGINEERING ~ SURVEYING
CORPORATE LICENSE: C-1771
101 W. MAIN ST., SUITE 202
GARNER, NC 27529
PHONE (919) 779-4854
FAX (919) 779-4056

PROJECT: SITE IMPROVEMENTS WATTS CHAPEL BAPTIST CHURCH

PROJECT #:
DATE: 10-7-2011
DRAWN BY:
CHK'D BY:

SHEET NAME: GRADING AND STORMWATER PLAN

SHEET NUMBER: C4

P:\WATTS\DESIGN\WATSBASE

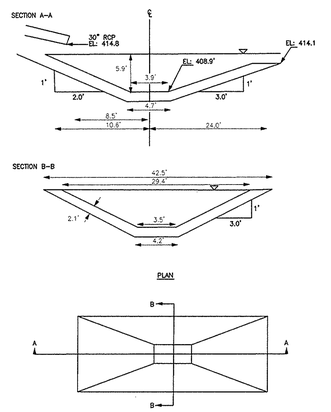

ROCK GRADATION	
% PASSING	SIZE (IN.)
100	19.92
60-85	14.94
21-50	9.96
5-20	4.98
0-5	1.992

FORBAY DETAIL

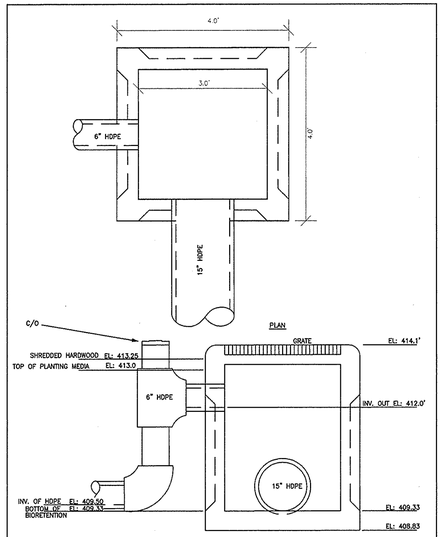

INLET AND UPTURNED ELBOW DETAIL

PIPE OUTLET TO FLAT AREA WITH NO DEFINED CHANNEL

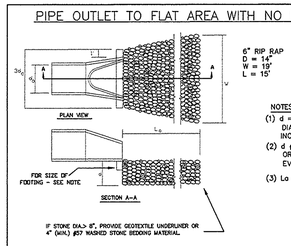

NOTES:
(1) d = 1.5 TIMES THE MAXIMUM STONE DIAMETER BUT NOT LESS THAN 8 INCHES.
(2) d ¿= 1' ABOVE MAXIMUM TAILWATER OR TOP OF CHANNEL BANK (WHICH-EVER IS LESS).
(3) Lo =LENGTH OF RIP RAP APRON.

NOTES: FOOTING SIZE

PIPE SIZE	WIDTH	DEPTH
15" - 24"	8"	12"
24" - 36"	12"	24"
36" - 54"	18"	36"

TYPE B
PIPE OUTLET TO WELL- DEFINED CHANNEL

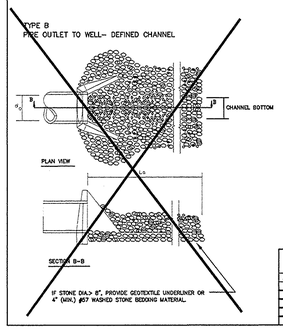

CITY OF RALEIGH CENTRAL ENGINEERING DEPARTMENT		
REVISIONS	DATED 7/3/00	DRAWN BY: JTB
	CULVERT OUTLET PROTECTION	
	STD. # 40.27	

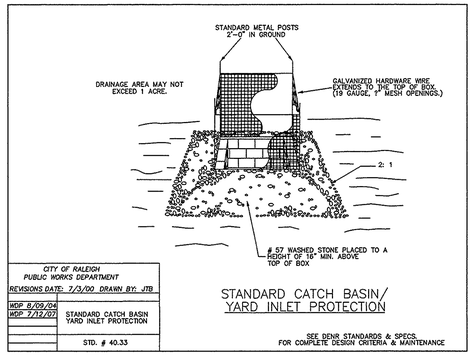

CITY OF RALEIGH PUBLIC WORKS DEPARTMENT	
REVISIONS DATE: 7/3/00 DRAWN BY: JTB	
WDP 8/09/04 WDP 7/12/07	STANDARD CATCH BASIN YARD INLET PROTECTION
	STD. # 40.33

STANDARD CATCH BASIN/ YARD INLET PROTECTION

SEE DENR STANDARDS & SPECS. FOR COMPLETE DESIGN CRITERIA & MAINTENANCE

CHECK DAM

DESIGN CRITERIA

THE DRAINAGE AREA IS LIMITED TO ONE HALF ACRE.
KEEP A MAXIMUM HEIGHT OF 2 FEET AT THE CENTER OF THE DAM.
KEEP THE CENTER OF THE CHECK DAM AT LEAST 9 INCHES LOWER THAN THE OUTER EDGES AT NATURAL GROUND ELEVATION.
KEEP THE SIDE SLOPES OF THE DAM AT 2:1 OR FLATTER
ENSURE THAT THE MAXIMUM SPACING BETWEEN DAMS PLACES THE TOE OF THE UPSTREAM DAM AT THE SAME ELEVATION AS THE TOP OF THE DOWNSTREAM DAM.
STABILIZE OUTLOW AREAS ALONG THE CHANNEL TO RESIST EROSION.
USE NOCT CLASS B STONE AND LINE THE UPSTREAM SIDE OF THE DAM WITH HOSE OR 30 MIL PVC.
MOVE THE DAM INTO THE DITCH BANKS AND EXTEND IT BEYOND THE ABUTMENTS A MINIMUM OF 1.5 FEET TO AVOID WASHOUT FROM OVERFLOW AROUND THE DAM.

NOTES

1. PLACE STONE TO THE LINE AND DIMENSION SHOWN IN THE PLAN ON A FILTER FABRIC FOUNDATION.
2. KEEP THE CENTER STONE SECTION AT LEAST 9 INCHES BELOW NATURAL GROUND LEVEL WHERE THE DAM ABUTS THE CHANNEL BANKS.
3. EXTEND STONE AT LEAST 1.5 FEET BEYOND THE DITCH BANK TO KEEP WATER FROM CUTTING AROUND THE ABUTMENTS OF THE DAM.
4. SET SPACING BETWEEN DAMS TO ASSURE THAT THE ELEVATION AT THE TOP OF THE LOWER DAM IS THE SAME AS THE TOE ELEVATION OF THE UPPER DAM.
5. PROTECT THE CHANNEL AFTER THE LOWEST CHECK DAM FROM HEAVY FLOW THAT COULD CAUSE EROSION.
6. MAKE SURE THAT THE CHANNEL REACH ABOVE THE MOST UPSTREAM IS STABLE.
7. ENSURE THAT OTHER AREAS OF THE CHANNEL, SUCH AS CULVERT ENTRANCES BELOW THE CHECK DAMS, ARE NOT SUBJECT TO DAMAGE OR BLOCKAGE FROM DISPLACED STONES.

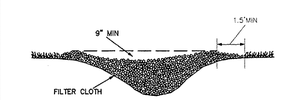

PLAN VIEW

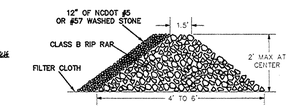

CROSS-SECTION VIEW

PURPOSE: TO REDUCE EROSION IN A CHANNEL BY REDUCING

DO NOT USE CHECK DAM IN INTERMITTENT OR PERENNIAL STREAMS.

L = THE DISTANCE SUCH THAT POINTS A AND B ARE OF EQUAL ELEVATION

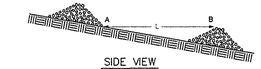

SIDE VIEW

CITY OF RALEIGH PUBLIC WORKS DEPARTMENT	
REVISIONS DATED 7/3/00 DRAWN BY: JTB	
WDP 9/24/04 WDP 7/6/07	CHECK DAM
	STD. # 40.15

SEE DENR STANDARDS & SPECS. FOR COMPLETE DESIGN CRITERIA & MAINTENANCE

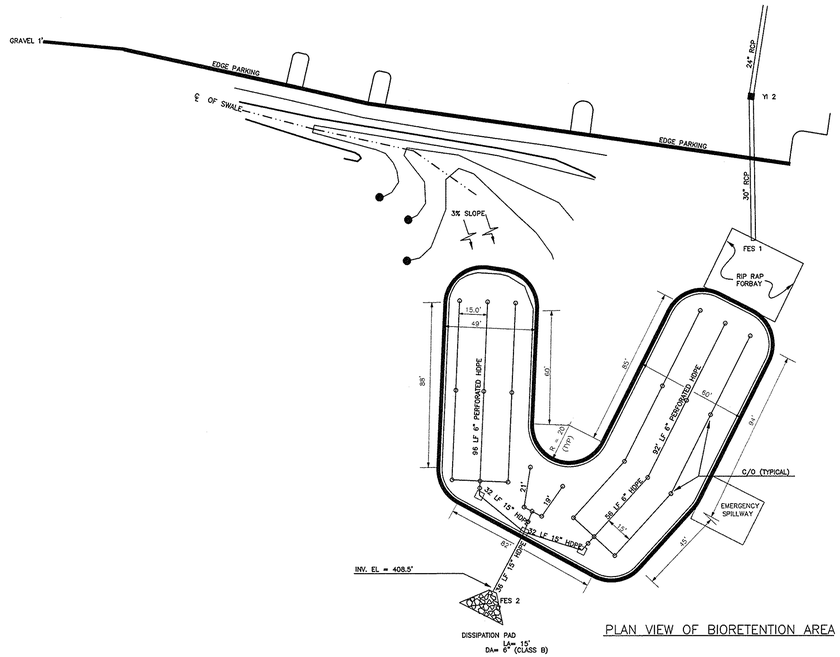

PLAN VIEW OF BIORETENTION AREA

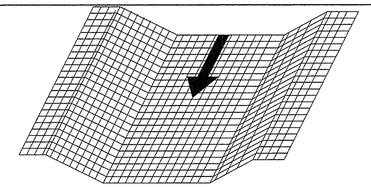

IN CHANNELS, ROLL OUT STRIPS OF NETTING PARALLEL TO THE DIRECTION OF FLOW AND AND OVER THE PROTECTIVE MULCH

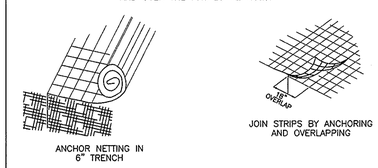

ANCHOR NETTING IN 6" TRENCH

JOIN STRIPS BY ANCHORING AND OVERLAPPING

INSTALLATION OF NETTING AND MATTING

INSULATION OF ROLLED MAT
RWK-006

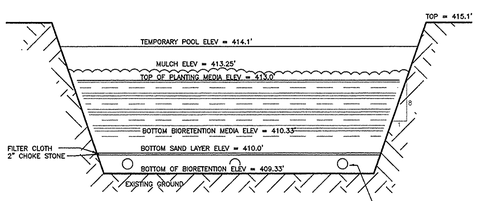

PROFILE OF BIORETENTION AREA

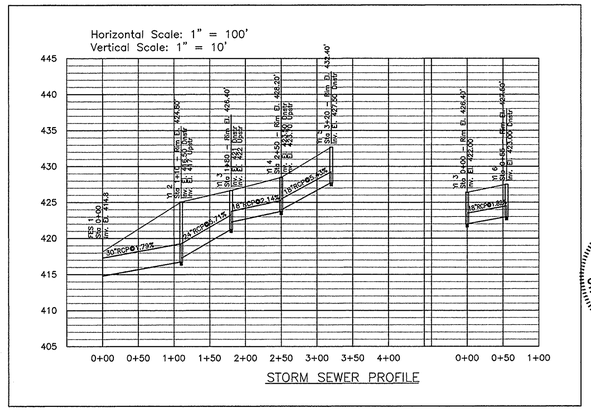

STORM SEWER PROFILE

DESIGN OF SPILLWAYS

DRAINAGE AREA (ACRES)	WEIR LENGTH[1] (FT)
1	4.0
2	6.0
3	8.0
4	10.0
5	12.0

[1] DIMENSIONS SHOWN ARE MINIMUM

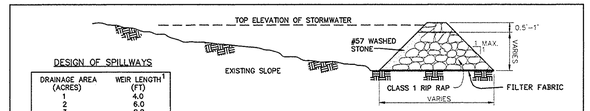

SIDE VIEW

NOTE:

HEIGHT & WIDTH DETERMINED BY EXISTING TOPOGRAPHY AND SEDIMENT STORAGE REQUIRED.

KEY RIP RAP INTO THE DAM FOR STABILIZATION.

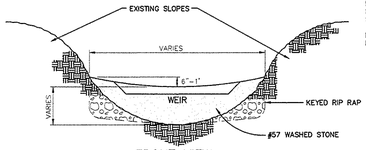

FRONT VIEW

STEP SEQUENCE

CITY OF RALEIGH CENTRAL ENGINEERING DEPARTMENT	
REVISIONS DATED 7/3/00 DRAWN BY: JTB	
	CHECK DAM
	STD. # 40.32

NORTH CAROLINA PROFESSIONAL SEAL 026395 ENGINEER CHARLES E. PHILLIPS

THIS DOCUMENT, TOGETHER WITH THE CONCEPTS AND DESIGNS INCORPORATED HEREIN, AS AN INSTRUMENT OF SERVICES, IS INTENDED ONLY FOR THE SPECIFIC PURPOSE AND CLIENT FOR WHICH IT WAS PREPARED. ANY REUSE WITHOUT WRITTEN AUTHORIZATION AND ADAPTATION BY RWK, PA SHALL BE AT THE CLIENT'S SOLE RISK, WITHOUT LIABILITY TO RWK, PA.

RWK, PA
ENGINEERING ~ SURVEYING
CORPORATE LICENSE: C-1771
101 W. MAIN ST., SUITE 202
GARNER, NC 27529
PHONE (919) 779-4854
FAX (919) 779-4056

NO.	DATE	REVISION	BY	CHK'D	APPROVED

PROJECT: SITE IMPROVEMENTS WATTS CHAPEL BAPTIST CHURCH

PROJECT #:	SHEET NAME:	SHEET NUMBER:
DATE: 6-7-2011	GRADING AND STORMWATER DETAILS	C4.D
DRAWN BY:		
CHK'D BY:		

P:\WATTS\DESIGN\WATSBASE

TOTAL SITE ACREAGE - 21.04
ZONING - RR, 15% REQ FOR
TREE CONSERVATION AREA
REQ. = 3.156 AC
PROVIDED = 3.19 AC
TOTAL AREA OF SITE TO REMAIN
IN FOREST - 9.84 AC
46.77 % OF TOTAL SITE

LEGEND:

EXISTING TREE

CRITICAL ROOT ZONE

SY-1 BA = 40.48 — BASAL AREA OF THE CONSERVATION SEGMENT

TREE PROTECTION FENCING

Appendix 4: Tree Conservation Plan Data Sheet

Project Name: Parking Lot Addition for Watts Chapel Baptist Church
Total Site Acres: 22.04 acre

(1) Primary Tree Conservation Areas
(C) Zone 2 of Neuse riparian buffers

Area A - 0.28 AC	8.78%	
Area B - 0.23 AC	7.21%	
Subtotal of Primary Tree Conservation Areas		
0.51 AC	15.99%	

(2) Secondary Tree Conservation Areas
(C) 65' perimeter yard adjacent to non-vacant property

Area A - 1.08 AC	33.85%

(C) 65' Alternate Compliance Area: 65' perimeter yard

Area B - 0.75 AC	23.51%
Area C - 0.63 AC	19.75%
StreetYard - 0.22 AC	6.90%
Subtotal of Secondary Tree Conservation Areas	
2.68 AC	84.01%

TOTAL ALL TREE CONSERVATION AREAS 3.19 AC 100.0%

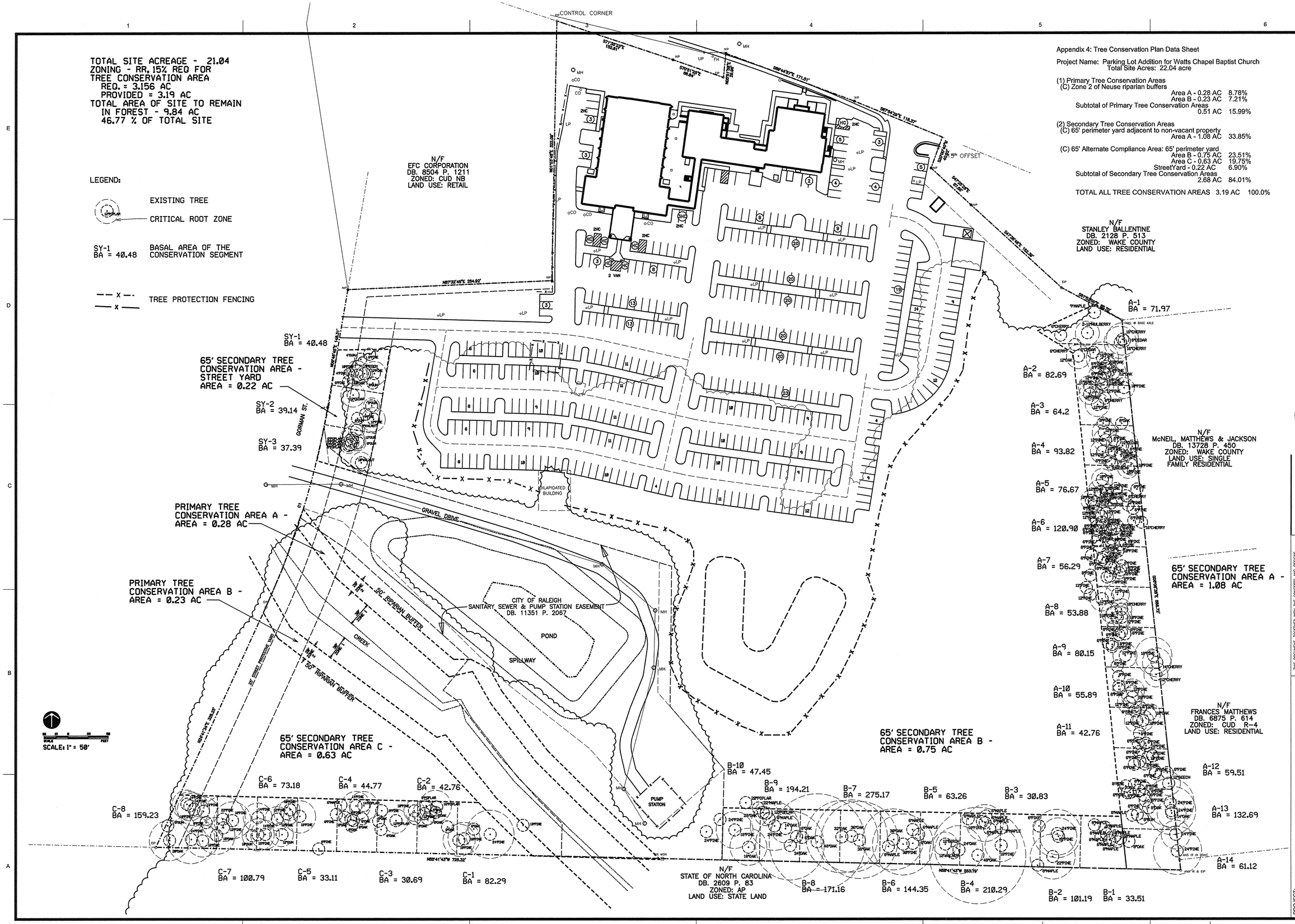

NO.	DATE	REVISION	BY	CHK'D	APPROVED

ALISON AJDUKIAT, ASLA
LANDSCAPE ARCHITECT
LAND PLANNER
(919) 303-4415
1110 STEEPBANK DRIVE
CARY, NC 27513

THIS DOCUMENT, TOGETHER WITH THE CONCEPTS AND DESIGNS PRESENTED HEREIN, AS AN INSTRUMENT OF SERVICE, IS INTENDED ONLY FOR THE SPECIFIC PURPOSE AND CLIENT FOR WHICH IT WAS PREPARED. REUSE OF AND IMPROPER RELIANCE ON THIS DOCUMENT WITHOUT WRITTEN AUTHORIZATION AND ADAPTATION BY RWK, PA SHALL BE WITHOUT LIABILITY TO RWK, PA.

RWK, PA
engineering ~ surveying
Corporate License: C-1771
101 Walnut St. Suite 202
Garner, NC 27529
Phone (919) 779-4854
Fax (919) 779-4035

PROJECT: SITE IMPROVEMENTS
WATTS CHAPEL BAPTIST CHURCH

SHEET NAME: TREE CONSERVATION

SHEET NUMBER: C5

PROJECT #:
DATE: 9-25-2011
DRAWN BY:
CHK'D BY:

P:\WATTS\DESIGN\WATSBASE

PLANT LIST

KEY	COUNT	PLANT NAME:	SIZE & SPACE	O/C SPACE
	TREES•			
GT	20	GLEDITSIA TRIACANTHOS INERMIS 'SHADEMASTER', THORNLESS HONEYLOCUST	2"CAL,8'HT	20'
JV	6	JUNIPERUS VIRGINIANA, EASTERN RED CEDAR	15 GAL, 8'HT	15'
LS	15	LIQUIDAMBAR STYRACIFLUA 'ROTUNDILOBA' FRUITLESS SWEETGUM	2"CAL,8'HT	20'
MV	10	MAGNOLIA VIRGINIANA, SWEETBAY MAGNOLIA	2"CAL,8'HT	15'
QP	22	QUERCUS PHELLOS, WILLOW OAK	2"CAL,8'HT	20'
SN	23	SALIX NIGRA, BLACK WILLOW	1"CAL,6'HT	15'
	SHRUBS			
CA	22	CALLICARPA AMERICANA, AM. BEAUTYBERRY	3GAL,18"HT	5'
CL	26	CLETHRA ALNIFOLIA 'RUBY SPICE', CLETHRA	3GAL,18"HT	4'
IV	45	ILEX VOMITORIA, YAUPON HOLLY	3GAL,18"HT	5'
LP	47	LEUCOTHOE POPULIFOLIA, FLORIDA LEUCOTHOE	3GAL,18"HT	4'
MC	49	MYRICA CERIFERA, WAX MYRTLE	3GAL,18"HT	5'
RF	57	RHODODENDRON 'FORMOSA', FORMOSA AZALEA	3GAL,18"HT	5'
RR	40	ROSA RUGOSA 'HANSA', HANSA ROSE	3GAL,18"HT	5'
VT	47	VIBURNUM TINUS 'SPRING BOUQUET', VIBURNUM	3GAL,18"HT	4'

• PLANT COUNTS ARE FOR THE CONTRACTOR'S CONVENIENCE ONLY AND ARE NOT GUARANTEED.

SEED MIXES:

MEADOW MIX (ERNMX-182) -
60% PANICUM RIGIDULUM, 10% CAREX LUPULINA, 10% JUNCUS EFFUSUS, 7% CAREX LURIDA, 5% SCIRPUS CYPERINUS, 2.5% SAURURUS CERNUUS, 2% JUNCUS CORIACEUS, 2% CAREX SQUARROSA, 1.5% HIBISCUS MOSCHEUTOS

RAIN GARDEN MIX (CUSTOM) -
20% JUNCUS EFFUSUS, 15% CHAMAECRISTA FASCICULATA, 10% CAREX LUPULINA, 10% BIDEN ARISTOSA, 10% POA TRIVIALIS, 5% HELENIUM AUTUMNALE, 5% ASTER NOVAE-ANGLIAE, 3% HIBISCUS MOSCHEUTOS, 3% ASTER FIRMUS, 3% ASTER PUNICEUS, 3% BIDENS CERNUA, 3% EUPATORIUM MACULATUM, 2% LOBELIA CARDINALIS, 2% LOBELIA SIPHILITICA, 2% MINULUS RINGENS, 2% RHEXIA MARIANA, 2% ASCLEPIAS INCARNATA

DRY SLOPE MIX (CUSTOM) -
20% LOLIUM MULTIFLORUM, 20% LESPEDEZA BICOLOR, 10% SORGHASTRUM NUTANS 'SUTHER', 10% PANICUM VIRGATUM 'CARTHAGE', 10% PANICUM CLADESTINUM 'TIOGA', 10% ANDROPOGON GERARDII 'BLAZE', 10% RHUS GLABRA, 5% ROBINIA PSEUDOACACIA, 5% CORNUS FLORIDA

SEED AVAILABLE AT ERNST CONSERVATION SEED, PHONE NUMBER: 800-873-3321, E-MAIL: ERNSTSALES@ERNSTSEED.COM
SEED AT A RATE OF 0.5 LB SEED MIX PER 1,000 SQ.FT.

PARKING CALCS -
EXISTING PARKING - 246 SPACES
(PARKING BEING ALTERED - 18 SPACES)
PROPOSED PARKING - 264 SPACES
TOTAL SPACES SHOWN - 510 SPACES
(14 HANDICAP INCLUDING
2 VAN ACCESSIBLE)

TOTAL SITE ACREAGE - 21.04
ZONING - RR, 15% REQ FOR
TREE CONSERVATION AREA
REQ. = 3.156 AC

TRANSITIONAL PROTECTIVE YARD
TYPE C - 20' DEEP
ALONG NORTH EAST BOUNDARY
VEHICULAR SURFACE AREA -
100,457 PROPOSED NEW VSA
TREES REQUIRED = 51
TREES PROVIDED = 54
SHRUBS REQUIRED = 201
SHRUBS PROVIDED = 201

LEGEND:
—X— TREE PROTECTION FENCE SEE SHEETS C-3 & C3-D
—X— CONCRETE WHEEL STOP
PROPOSED PLANT MATERIAL
MV — PLANT - SEE KEY IN PLANT LIST
7-CA — COUNT PER PLANT GROUPING
NEW GRASSING - SEE PLANTING NOTE 8

TRANSITIONAL PROTECTIVE YARD
20' DEEP TYPE C - 150 LF
CHURCH USE ADJACENT TO RESIDENTIAL
TREES REQ.= 11, SHRUBS REQ.= 120

N/F
EFC CORPORATION
DB. 8504 P. 1211
ZONED: CUD NB
LAND USE: RETAIL

GORMAN ST.

65' SECONDARY TREE CONSERVATION AREA - AREA = 0.22 AC

PRIMARY TREE CONSERVATION AREA A - AREA = 0.28 AC

PRIMARY TREE CONSERVATION AREA B - AREA = 0.23 AC

GRAVEL DRIVE

UNLOCATED BUILDING

CITY OF RALEIGH
SANITARY SEWER & PUMP STATION EASEMENT
DB. 11351 P. 2067

POND

SPILLWAY

CREEK

50' RIPARIAN BUFFER

50' STREET PROTECTIVE YARD

3.4 LBS MEADOW MIX - SEED WITH LAYER OF CLEAN GRAIN STRAW

4.9 LBS RAIN GARDEN MIX - SEED WITH LAYER OF CLEAN GRAIN STRAW

0.75 LBS MEADOW MIX - SEED WITH LAYER OF CLEAN GRAIN STRAW

9.0 LBS DRY SLOPE MIX - SEED WITH LAYER OF CLEAN GRAIN STRAW

PROPOSED STORMWATER -
5.36 AC OF IMPERVIOUS
PROPOSED STORAGE -
4,615 SQFT IN SWALE
16,000 SQFT IN BIORETENTION

STEMS @ 1/ 300 SF
STEMS PROPOSED = 54

20 10 0 20 40 80
SCALE FEET
SCALE: 1" = 40'

NO. | DATE | REVISION | BY | CHK'D | APPROVED

ALISON A. POCOAT, ASLA
LANDSCAPE ARCHITECT
LAND PLANNER
NC REGISTERED LANDSCAPE ARCHITECT
ALISON A. POCOAT
NORTH CAROLINA
LICENSED
LANDSCAPE ARCHITECT
1565
919 553-4115
105 STEEPBANK DRIVE
CARY, NC 27518

THIS DOCUMENT, TOGETHER WITH THE CONCEPTS AND DESIGNS PRESENTED HEREIN, AS AN INSTRUMENT OF SERVICE, IS INTENDED ONLY FOR THE SPECIFIC PURPOSE AND CLIENT FOR WHICH IT WAS PREPARED. REUSE OF AND IMPROVEMENTS TO THIS PROPERTY BY OTHERS WITHOUT WRITTEN AUTHORIZATION AND ADAPTATION BY RWK, PA SHALL BE WITHOUT LIABILITY TO RWK, PA.

RWK, PA
engineering ~ surveying
Corporate License: C-1771
101 W. Main St., Suite 202
Garner, NC 27529
Phone (919) 779-4854
Fax (919) 779-4055

PROJECT: SITE IMPROVEMENTS
WATTS CHAPEL BAPTIST CHURCH

SHEET NAME: PLANTING PLAN

SHEET NUMBER: L1

PROJECT #:
DATE: 9-25-2011
DRAWN BY:
CHK'D BY:

P:\WATTS\DESIGN\WATSBASE

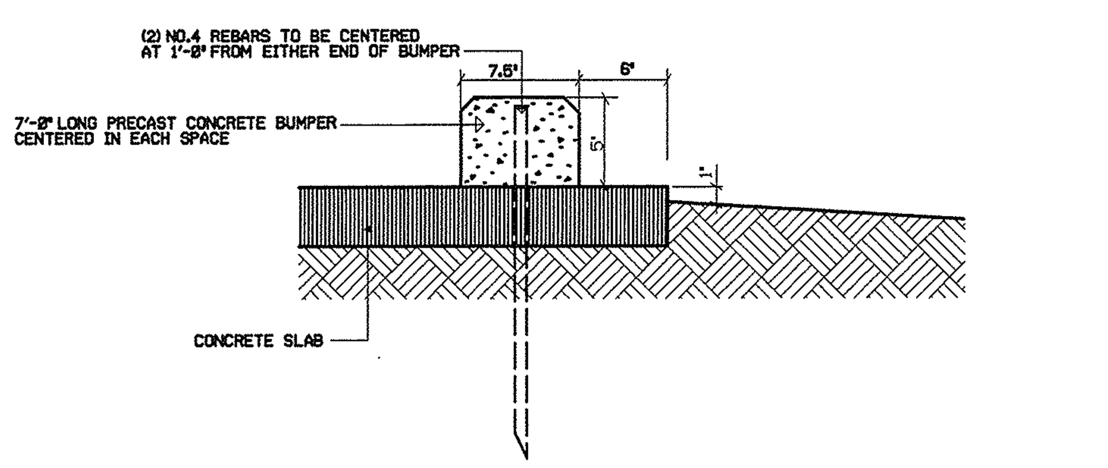

PRECAST CONCRETE WHEEL STOP
NOT TO SCALE

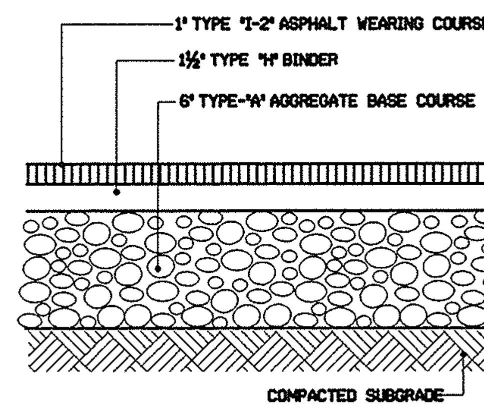

ASPHALT PARKING PAVING
NTS

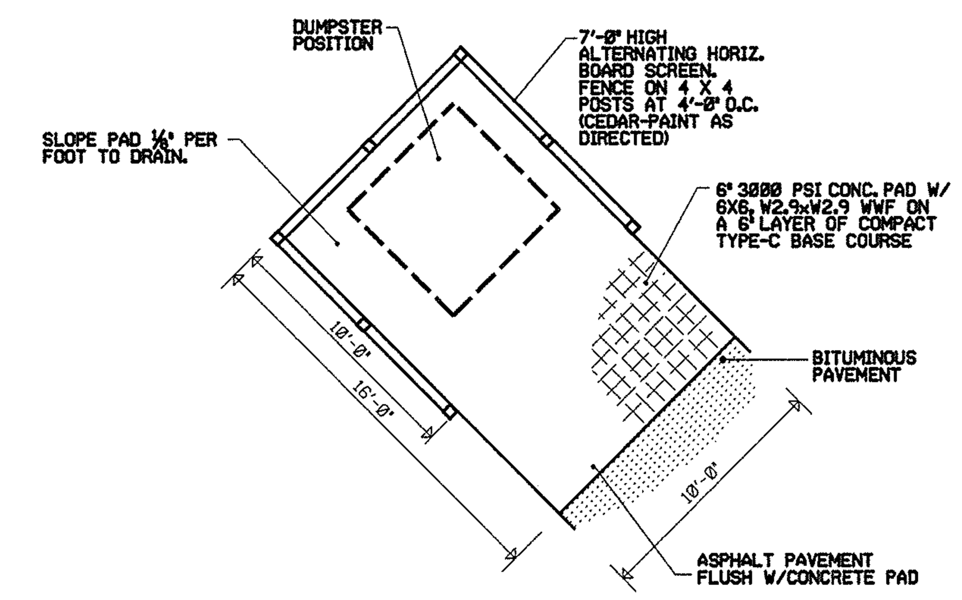

DUMPSTER PAD & ENCLOSURE
NTS

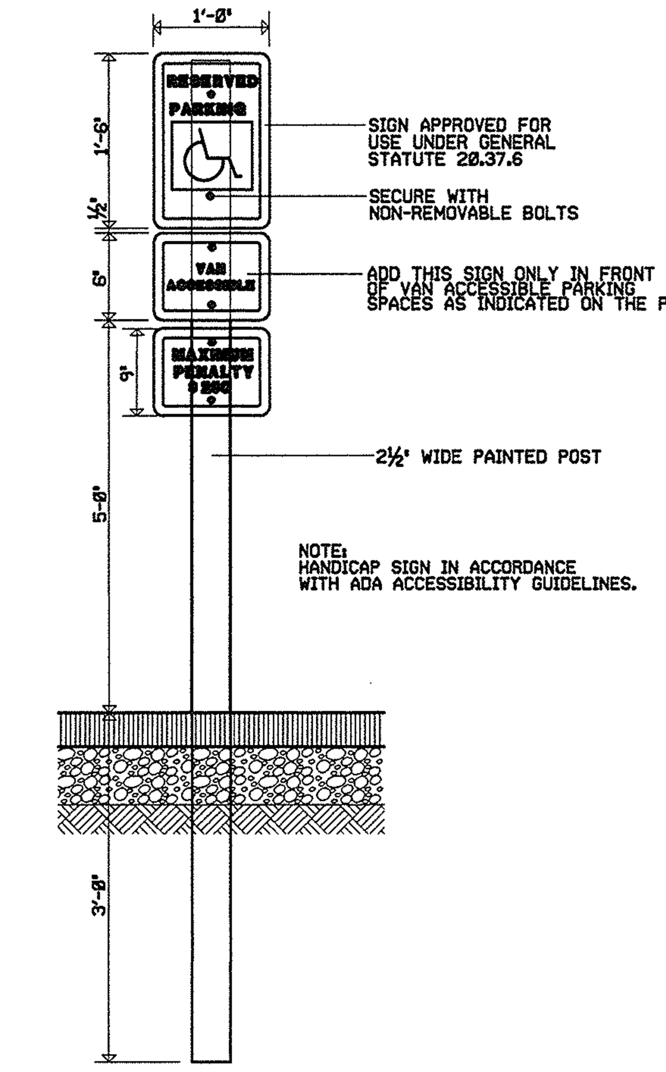

HANDICAP SIGN
NTS

TREE PRESERVATION PLAN:

1. A. ONE MONTH PRIOR TO ANY CLEARING, GRUBBING, OR GRADING, TREE PROTECTION FENCING IS TO BE INSTALLED ALONG TREE LINES AS INDICATED ON THE PLAN. CONTRACTOR IS TO VERIFY THAT THE LOCATION OF THE FENCE IS CORRECT.
   1. BEFORE ANY GRADING, TAKE BACKHOE BLADE AND CUT VERTICALLY INTO SOIL ALONG THE OUTER EDGE OF THE TREE PROTECTION FENCE LINE. HAND CUT ROOT ENDS EXTENDING OUT FROM THE CUT LINE.
   2. SITE NOT TO BE PROTECTED, SHALL BE CLEARED AND GRUBBED. TREES ALONG THE OUTER EDGE OF TREE SAVE AREAS THAT APPEAR DAMAGED OR UNABLE TO SURVIVE THE STRESS OF CONSTRUCTION SHALL BE CUT DOWN WITH THE STUMPS LEFT IN TACT. A CERTIFIED ARBORIST SHALL BE HIRED TO DETERMINE WHICH TREES REQUIRE THIS TREATMENT.
   3. BLOW A 1" LAYER OF YARD WASTE COMPOST MULCH INTO TREE SAVE AREAS FROM THE OUTER EDGES OF EACH AREA IMMEDIATELY AFTER ROOT PRUNING HAS BEEN COMPLETED. YARD WASTE COMPOST MULCH SHALL INCLUDE LEAF AND GRASS MATERIAL, SHREDDED WOOD, AND FLORAL MATERIAL FULLY COMPOSTED - TO A STAGE WHERE THE TEMPERATURE OF THE MATERIAL IS AMBIENT TEMPERATURE. ENSURE THAT NO TRASH, METALS OR PLASTICS ARE INCORPORATED IN THE COMPOST. OTHER THAN THE ADDITION OF MULCH, TREE SAVE AREAS ARE TO BE LEFT UNDISTURBED. NO STORAGE OF CONSTRUCTION EQUIPMENT, MECHANICAL TRAFFIC, OR FOOT TRAFFIC IS PERMITTED WITHIN THESE AREAS. DO NOT FERTILIZE WITHIN THE TREE SAVE AREAS!
   4. TREES LARGER THAT 8" DBH THAT ARE LOCATED WITHIN THE TREE SAVE AREAS BUT WITHIN 25' OF THE OUTER EDGE SHALL HAVE CROWN REDUCTION PRUNING IN PROPORTION TO THE AMOUNT OF ROOT DAMAGE THAT IS LIKELY TO OCCUR BASED ON THE LOCATION OF EACH INDIVIDUAL TREE. A CERTIFIED ARBORIST WILL BE HIRED TO DETERMINE WHICH TREES REQUIRE ATTENTION AND THE EXTENT AND TYPE OF TREATMENT FOR SAID TREES. CROWN REDUCTION IS TO MEET NAA STANDARDS.

   B. IMMEDIATELY PRIOR TO GRADING, DIVERSION DITCHES AND EROSION CONTROL MEASURES SHALL BE INSTALLED ENSURING THAT NO ADDITIONAL RUN-OFF OF SILT WILL EFFECT PROTECTED AREAS.

   C. NO TRANSPLANTING IS PROPOSED FROM OR TO THESE AREAS.

MAINTENANCE NOTES:

1. FERTILIZE TREES TWICE PER YEAR - EARLY SPRING WITH HIGH NITROGEN FERTILIZER (A RATIO OF 4-1-1 OR MULTIPLES THEREOF), AND EARLY FALL WITH HIGH POTASSIUM AND PHOPHOROUS FERTILIZER (A RATIO OF 1-4-4 OR MULTIPLES THEREOF). ENSURE THAT FERTILIZER IS WATERED IN.
2. PRUNING / TRIMMING OF SHRUBS SHOULD BE DONE IN EARLY SPRING JUST PRIOR TO LEAFFING OUT. HEAD LIMBS WITH EXCESSIVE HEIGHT - REMOVE LIMB BACK TO THE CROTCH IN THE MAIN STEM. DO NOT HEDGE! REMOVE ALL DEAD WOOD OR BRANCHES.
3. HAND WEED UNLESS WEED NUMBERS BECOME EXCESSIVE. TREAT EXCESSIVE BROADLEAF WEEDS WITH AN APPLICATION OF 2,4-D AS DIRECTED ON PACKAGE. TREAT EXCESSIVE WEED GRASS PROBLEMS WITH ROUNDUP.
4. MINOR PEST INFESTATIONS CAN GO UNTREATED. EXCESSIVE INSECT AND GRUB INFESTATIONS NEED TO BE TREATED AS DIAGNOSED WITH AN APPROPRIATE PESTICIDE. EXCESSIVE FUNGAL INFESTATIONS NEED TO BE TREATED IN TWO TO THREE SUCESSIVE TREATMENTS OVER A PERIOD OF TWO TO THREE WEEKS WITH AN APPROPRIATE FUNGICIDE.
5. PROVIDE A HALF INCH ANNUAL APPLICATION OF YARD WASTE COMPOST TO ALL BEDDED AREAS IN THE EARLY SPRING. RAKE OUT EVENLY BUT DO NOT TILL IN.
6. REFURBISH MULCH TWICE PER YEAR - SPRING AND FALL. DO NOT EXCEED 2" OF MULCH AND COMPOST COMBINED AT ANY ONE TIME.
7. EVALUATE SOIL PH AND IRON LEVELS ANNUALLY. APPLY AMMENDMENTS AS NEEDED ACCORDING TO SOIL ANALYSIS.

NOTE: FAILURE TO MAINTAIN ALL PLANTINGS IN ACCORDANCE WITH THIS PLAN MAY CONSTITUTE A VIOLATION OF THE LAND DEVELOPMENT ORDINANCE AND MAY RESULT IN FINES.

SEEDED AREA MAINTENANCE -

FOR MEADOW MIX AND RAIN GARDEN MIX: MOW ANNUALLY BY HAND IN EARLY SPRING TO A HEIGHT OF 4-6". DO NOT FERTILIZE. ADD 1-2" OF YARD WASTE COMPOST TO TOP OF SEEDED AREA ANNUALLY JUST AFTER MOWING. ENSURE THAT SILTATION IS REMOVED ANNUALLY. ENSURE THAT MAINTENANCE DOES NOT CREATE AREAS OF COMPACTION.
FOR DRY SLOPE MIX: MOW FIRST YEAR TO A HEIGHT OF 8-12" AT THE END OF THE GROWING SEASON. ADD 1-2" YARD WASTE COMPOST OVER ENTIRE AREA IN EARLY SPRING. ALLOW TO NATURALIZE DURING SUBSEQUENT YEARS.

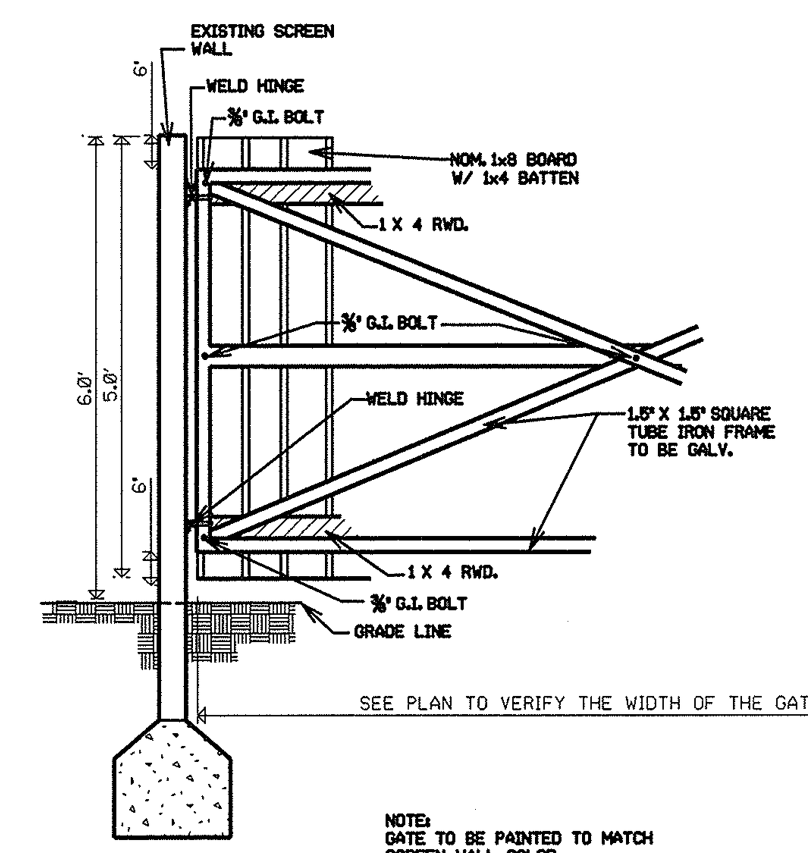

NOTE: GATE TO BE PAINTED TO MATCH SCREEN WALL COLOR.

DUMPSTER SCREEN AREA GATE
NTS

PLANT NOTES

1. THE EXACT LOCATION OF ALL UNDERGROUND UTILITIES SHALL BE DETERMINED AND VERIFIED IN THE FIELD BY THE LANDSCAPE CONTRACTOR. PLANTINGS SHALL BE ADJUSTED TO AVOID CONFLICT WITH SAID UTILITIES.

2. SUBSOIL CONDITIONS AND SUBSURFACE DRAINAGE REQUIREMENTS OF ALL PLANT MATERIALS SHALL BE DETERMINED IN THE FIELD BY THE LANDSCAPE CONTRACTOR.

3. ALL PLANT MATERIAL SHALL BEAR THE SAME RELATIONSHIP TO THE NEW GRADE THAT THEY BORE TO THE PREVIOUS GRADE.

4. THE LANDSCAPE CONTRACTOR SHALL STAKE THE LOCATION OF ALL TREES AND SHRUBS AND CHECK FOR CORRECT SPACING PRIOR TO PLANTING.

5. ALL PLANT MATERIALS ARE AS STATED. NO SUBSTITUTIONS WITHOUT THE CONSENT OF THE LANDSCAPE ARCHITECT.

6. ALL NYLON OR POLYESTER TREATED BURLAP AND SYNTHETIC ROPING SHALL BE REMOVED ENTIRELY PRIOR TO PLANTING. ALL WIRES, ROPES AND HOSES USED TO STAKE THE TREES SHALL BE REMOVED NO LATER THAN 18 MONTHS AFTER PLANTING.

7. THE OPTIMUM PLANTING SEASON IS APRIL 15 - MAY 15 AND SEPT. 15 - OCT. 15. ALL PLANTS ARE TO MEET OR EXCEED THE AMERICAN ASSOCIATION OF NURSERYMEN STANDARDS FOR THE SIZES SPECIFIED. ONE WEEK PRIOR TO PLANTING, BEDDED AREAS ARE TO BE WATERED AND TREATED WITH ROUNDUP, FINALE OR AN EQUALLY EFFECTIVE COMPLETE HERBICIDE. BEDS SHALL BE TILLED TO A DEPTH OF 6" AND AMENDED WITH A 2" LAYER OF LEAF OR COMPARABLE COMPOST MATERIAL ALONG WITH 0-8-8 FERTILIZER (AT A RATE OF 25 LBS PER 5,000 SQ. FT.) AND DOLOMITIC LIME (AT A RATE OF 10 LBS PER 5,000 SQ. FT.). THESE RATES ARE TO BE ADJUSTED AS PER SOIL TESTING RESULTS AS NEEDED. ALL BEDS SHALL BE MULCHED WITH A 2" THICK LAYER OF SHREDDED HARDWOOD MULCH. PLANTS SHALL BE WATERED THOROUGHLY IMMEDIATELY UPON INSTALLATION.

8. NEW GRASSING AREAS ARE TO BE SEEDED WITH PRINCESS-77 BERMUDA GRASS OR OTHER T10 CERTIFIED BERMUDA AT A RATE OF 1 LB / 1000 SQ.FT.

9. THE CONTRACTOR SHALL PROVIDE AN 18 MONTH GUARANTEE ON ALL PLANT MATERIAL AND WORK.

10. ALL SOIL SURFACES ARE TO BE COVERED WITH PLANTS, MULCH, BUILDING OR PAVING. LEAVE NO SOIL BARE. ALL PLANTINGS SHALL BE BEDDED AND MULCHED .

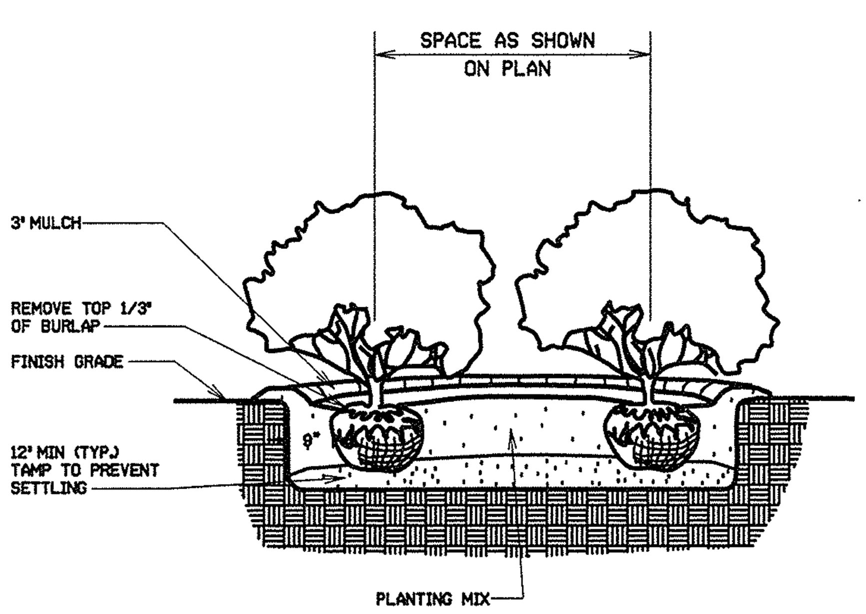

SHRUB/GROUND COVER PLANTING DETAIL
NTS

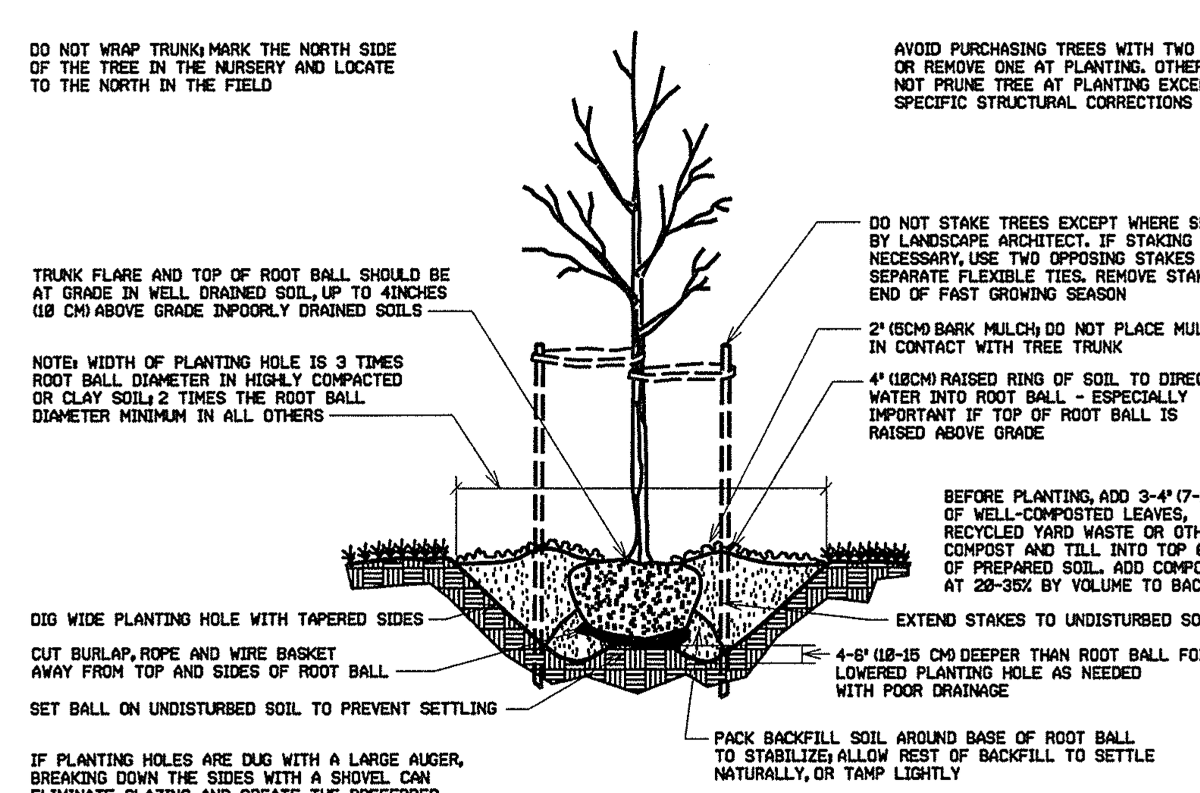

TREE PLANTING DETAIL (B&B PLANTS)
ADAPTED FROM *"ARCHITECTURAL GRAPHIC STANDARDS"* 1998 AND WATSON & HIMELICK *"PRINCIPALS AND PRACTICE OF PLANTING TREES AND SHRUBS"* 1997

NOTES:

1. WHERE SEVERAL TREES WILL BE PLANTED CLOSE TOGETHER SUCH THAT THEY WILL LIKELY SHARE ROOT SPACE, TILL IN SOIL AMENDMENTS TO A DEPTH OF 4-6" (10-15 CM) OVER THE ENTIRE AREA.
2. FOR CONTAINER GROWN TREES, USE FINGERS OR SMALL HAND TOOLS TO PULL THE ROOTS OUT OF THE OUTER LAYER OF POTTING SOIL; THEN CUT OR PULL APART ANY ROOTS CIRCLING THE PERIMETER OF THE CONTAINER.
3. DURING THE DESIGN PHASE, CONFIRM THAT WATER DRAINS OUT OF THE SOIL; USE LOWERED PLANTING HOLE DEPTH AND DESIGN ALTERNATE DRAINAGE SYSTEM AS REQUIRED.
4. THOROUGHLY SOAK THE TREE ROOT BALL AND ADJACENT PREPARED SOIL SEVERAL TIMES DURING THE FIRST MONTH AFTER PLANTING AND REGULARLY THROUGHOUT THE FOLLOWING TWO SUMMERS.
5. THE PLANTING PROCESS IS SIMILAR FOR DECIDUOUS AND EVERGREEN TREES.

TREE PLANTING DETAIL
NTS

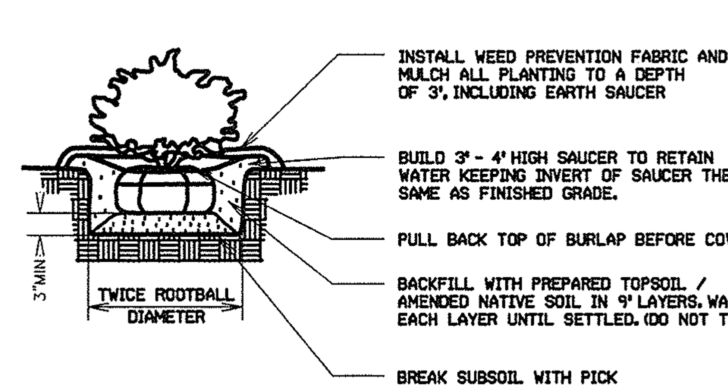

SPECIMEN SHRUB PLANTING DETAIL
NTS

NO. | DATE | REVISION | BY | CHK'D | APPROVED

NORTH CAROLINA REGISTERED LANDSCAPE ARCHITECT · ALISON A. POCKAT · 563 · 10/7/11

ALISON A. POCKAT, ASLA
LANDSCAPE ARCHITECT
LAND PLANNER
(919) 363-4415
106 STEEPBANK DRIVE
CARY, NC 27518

THIS DOCUMENT, TOGETHER WITH THE CONCEPTS AND DESIGNS PRESENTED HEREIN, AS AN INSTRUMENT OF SERVICES, IS INTENDED ONLY FOR THE SPECIFIC PURPOSE AND CLIENT FOR WHICH IT WAS PREPARED. REUSE OF AND IMPROPER RELIANCE ON THIS DOCUMENT WITHOUT WRITTEN AUTHORIZATION AND ADAPTATION BY RWK, PA SHALL BE WITHOUT LIABILITY TO RWK, PA.

RWK, PA
engineering ~ surveying
Corporate License: C-1771
101 W. Main St., Suite 202
Garner, NC 27529
Phone (919) 779-4854
Fax (919) 779-4056

PROJECT: SITE IMPROVEMENTS
WATTS CHAPEL BAPTIST CHURCH

PROJECT #:
DATE: 9-25-2011
DRAWN BY:
CHK'D BY:

SHEET NAME: SITE NOTES & DETAILS
SHEET NUMBER: L1.D

P:\WATTS\DESIGN\WATSBASE