WAKEMED NORTH HEALTHPLEX EXPANSION
SP-15-2012

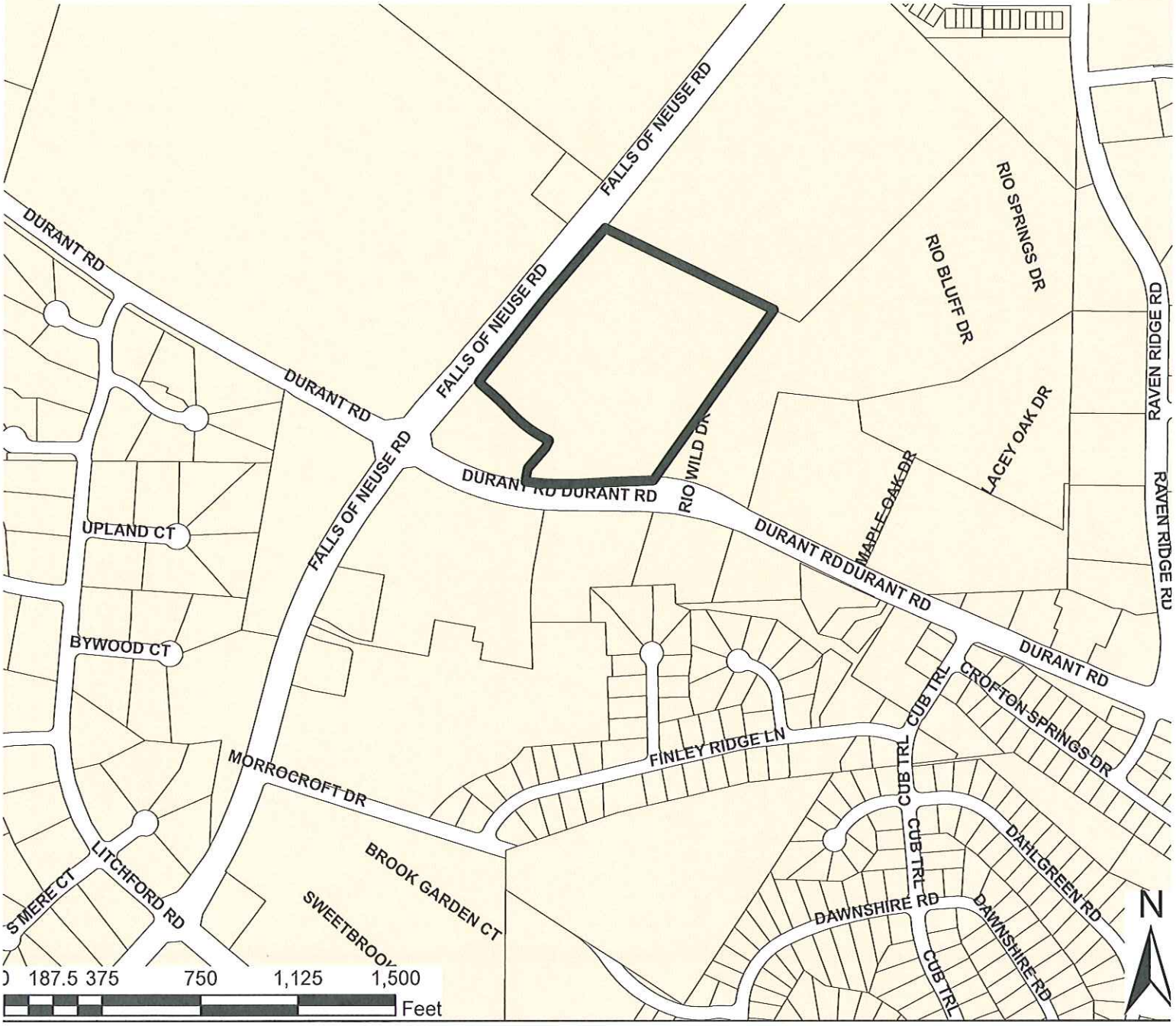

Zoning:	**O& I-1-CUD**	Number of Lots:	**0**
CAC:	**NORTH**	Planner:	**MEADE BRADSHAW**
Drainage Basin:	**PERRY Creek**	Phone:	**(919) 516-2664**
		Applicant Contact:	**COLEJENEST & STONE**
Acreage:	**14.53**	Phone:	**(919) 645-5968**

Planning & Development

Customer Service Center
One Exchange Plaza, Suite 400
Raleigh, North Carolina 27601
Phone 919-516-2495
Fax 919-516-2685

SP-15-2012

Preliminary Development Plan Application

When submitting plans, please check appropriate review type and include the Plan Checklist document.

Preliminary Approvals		FOR OFFICE USE ONLY
☒ Site Plans for Planning Commission or City Council ☐ Preliminary Administrative Site Plans ☐ Group Housing * ☐ Multifamily (Infill)*	☐ Subdivision* ☐ Infill Subdivision* ☐ Infill Recombination* ☐ Cluster Subdivision ☐ Expedited Subdivision Review	Transaction Number 329719
* May require Planning Commission or City Council Approval		

Section A

GENERAL INFORMATION

Development Name WAKEMED NORTH HEALTHPLEX EXPANSION

Proposed Use HOSPITAL

Property Address(es) 10000 FALLS OF NEUSE ROAD

Wake County Property Identification Number(s) for each parcel to which these guidelines will apply:

P.I.N. 1718952829	P.I.N.	P.I.N.	P.I.N.

What is your project type? ☐ Apartment ☐ Banks ☐ Elderly Facilities ☒ Hospitals ☐ Hotels/Motels ☐ Industrial Building ☐ Mixed Residential ☐ Non-Residential Condo ☐ Office ☐ Religious Institutions ☐ Residential Condo ☐ Retail ☐ School ☐ Shopping Center ☐ Single Family ☐ Telecommunication Tower ☐ Townhouse ☐ Other: If other, please describe:

PRELIMINARY ADMINISTRATIVE REVIEW	Per City Code Section 10-2132.2, summarize the reason(s) this plan can be reviewed administratively not requiring Planning Commission or City Council approval. N/A
PLANNING COMMISSION OR CITY COUNCIL REVIEW	Per City Code Section 10-2132.2, summarize the reason(s) this plan requires Planning Commission or City Council Preliminary Approval. 10-2132.2 (6) (14) INSTITUTION/CIVIC/SERVICE USE GREATER THAN TWENTY FIVE THOUSAND (25,000) SQUARE FEET AND LOCATED WITHIN FOUR HUNDRED (400) FEET OF ANY RESIDENTIAL DISTRICT, OR ANY LOT LINE CONTAINING ANY DWELLING
CLIENT (Owner or Developer)	Company WAKEMED Name (s) TOM CAVENDER Address 3000 NEW BERN AVENUE Phone (919)350-8098 · Email TCAVENDER@WAKEMED.ORG · Fax (919)350-6739
CONSULTANT (Contact Person for Plans)	Company COLEJENEST & STONE Name (s) DANIEL MCGLAMERY DMCGlamery@colejeneststone.com 919 645-5968

Map-171802, 14.53 ac, North CAC, O&I 1 CUD
(SP-60-05) Drainage Perry

DEVELOPMENT TYPE & SITE DATA TABLE (Applicable to all developments)

Has your project previously been through the pre-submittal process? If yes, provide the transaction #

Zoning Information	Building Information
Zoning District(s) CUD O & I 1	Proposed building use(s) HOSPITAL
If more than one district, provide the acreage of each	Existing Building(s) sq. ft. gross 213,000 SQ FT
Overlay District N/A	Proposed Building(s) sq. ft. gross 86,212 SQ FT
Total Site Acres 14.89 Inside City Limits ☐ Yes ☒ No	Total sq. ft. gross (existing & proposed) 299,212 SQ FT
Off street parking Required 320 Provided 854	Proposed height of building(s) 81'-4"
COA (Certificate of Appropriateness) case # N/A	FAR (floor area ratio percentage) 46.1%
BOA (Board of Adjustment) case # A- N/A	Building Lot Coverage percentage 16.3% (site plans only)
CUD (Conditional Use District) case # Z-106-97	
Stormwater Information	
Existing Impervious Surface 9.2 AC/401,064 SF acres/square feet	Flood Hazard Area ☐ Yes ☒ No
Proposed Impervious Surface 9.3 AC/405,432 SF acres/square feet	**If Yes, please provide**
Neuse River Buffer ☐ Yes ☒ No Wetlands ☐ Yes ☒ No	Alluvial Soils Flood Study FEMA Map Panel #

CONFORMITY WITH THE COMPREHENSIVE PLAN (Applicable to all developments)

Provide a description of how your plan conforms to the guidelines of the Comprehensive Plan 2030

PER THE COMPREHENSIVE PLAN'S PLANNED USE OF THIS PARCEL, THE PROPOSED IMPROVEMENTS ARE AN EXPANSION OF THE EXISTING BUILDING TO PROVIDE ADDITIONAL MEDICAL SERVICES. ADDITIONAL RIGHT-OF-WAY FOR ADJACENT HAVE BEEN DEDICATED TO ACCOUNT FOR FUTURE ROAD WIDENING AND IMPROVEMENTS

FOR SUBDIVISIONS, MULTIFAMILY OR GROUP HOUSING PROJECTS ONLY

1. Total # Of Townhouse Lots Detached Attached	11. Total number of Open Space (only) lots
2. Total # Of Single Family Lots	12. Total number of all lots
3. Total # Of Apartment Or Condominium Units	13. Is your project a cluster unit development? ☐ Yes ☐ No
4. Total # Of Congregate Care Or Life Care Dwelling Units	**If Yes, please answer the questions below:**
5. Total # Of Mobile Home Lots	a) Total number of Townhouse Lots
6. Total Number of Hotel Units	b) Total number of Single Family Lots
7. Overall Total # Of Dwelling Units (1-6 Above)	c) Total number of Group Housing Units
8. Bedroom Units 1br 2br 3br 4br or more	d) Total number of Open Space Lots
9. Overall Unit(s)/Acre Densities Per Zoning District(s)	e) Minimum Lot Size
10. If your project is an infill subdivision, provide the infill calculations per City Code 10-3032 on the front cover of your drawing sets	f) Total Number of Phases
	g) Perimeter Protective Yard Provided ☐ Yes ☐ No
	h) Must provide open space quotient per City Code 10-3071 (5)

SIGNATURE BLOCK (Applicable to all developments)

In filing this plan as the property owner(s), I/we do hereby agree and firmly bind ourselves, my/our heirs, executors, administrators, successors and assigns jointly and severally to construct all improvements and make all dedications as shown on this proposed subdivision plan as approved by the City.

I hereby designate DANIEL J. MCGLAMERY COLE JENEST & STONE, PA to serve as my agent regarding this application, to receive and respond to administrative comments, to resubmit plans on my behalf and to represent me in any public meeting regarding this application.

I/we have read, acknowledge and affirm that this project is conforming to all application requirements applicable with the proposed development use.

Signed [signature] Wake Med Date 4/16/12

Signed [signature] COLE JENEST & STONE, P.A. Date 4/17/12

Section B

TO BE COMPLETED BY APPLICANT	YES	N/A	TO BE COMPLETED BY CITY STAFF: YES	NO	N/A
General Requirements					
1. Filing Fee for Plan Review – Payments may be made by cash, Visa, Master Card or check made payable to: City of Raleigh (No fee for Infill recombination)	☑		✓		
2. **Preliminary Development Plan Application** completed and signed by the property owner	☑		✓		
3. Client must complete and print page 1 and 2 of the **Preliminary Development Plan Application** to the plan cover sheet (not applicable for infill recombination)	☑	☐	✓		
4. I have referenced the **Preliminary Development Plan Checklist** and by using this as a guide, it will ensure that I receive a complete and thorough first review by the City of Raleigh	☑		✓		
5. Provide the following plan sheets:	☐				
a) Cover sheet: includes general notes, owner's name, contact's name, telephone number, mailing address and email address	☑		✓		
b) Existing Conditions Sheet	☑	☐	✓		
c) Proposed Site, Subdivision Plan, or Recombination Plan	☑		✓		
d) Proposed Grading and Stormwater Plan	☑	☐	✓		
e) Proposed Utility Plan, including Fire	☑	☐	✓		
f) Proposed Tree Conservation Plan	☐	☑			✓
g) Proposed Landscaping Plan (Landscape Plan not required for commercial subdivisions)	☑	☐	✓		
h) Building elevations that show maximum height from natural and finished grade, buildings to be removed	☑	☐			
6. Ten (10) sets of proposed plans to engineering scale (1" = 20', 1" =100', etc.), and date of preparation. For re-submittals only – include all revision dates	☑		✓		
7. Plan size 18"x24" or 24"x36"	☑		✓		
8. A vicinity map no smaller/less than 1"=500' and no larger than 1"=1000' to the inch, showing the position of the subdivision with its relation to surrounding streets and properties, and oriented in the same direction as the preliminary plan	☑		✓		
9. Include sheet index and legend defining all symbols with true north arrow, with north being at the top of the map	☑				
10. Digital copy of only the plan and elevations. Label the CD with the plan name, case file number, and indicate how many times the plan has been resubmitted for review	☑		✓		
11. Wake County School Form, if dwelling units are proposed	☐	☑			✓
12. Preliminary stormwater quantity and quality summary and calculations package	☑	☐		onsheets	
13. For secondary tree conservation areas, include two (2) copies of the tree cover report completed by a certified arborist, North Carolina licensed landscape architect, or North Carolina registered forester	☐	☑			✓

![Planning & Development logo]

Planning & Development

Customer Service Center
One Exchange Plaza, Suite 400
Raleigh, North Carolina 27601
Phone 919-516-2495
Fax 919-516-2685

Preliminary Development Plan Application
When submitting plans, please check appropriate review type and include the Plan Checklist document.

Preliminary Approvals		FOR OFFICE USE ONLY
☒ Site Plans for Planning Commission or City Council ☐ Preliminary Administrative Site Plans ☐ Group Housing * ☐ Multifamily (Infill)*	☐ Subdivision* ☐ Infill Subdivision* ☐ Infill Recombination* ☐ Cluster Subdivision ☐ Expedited Subdivision Review	Transaction Number
* May require Planning Commission or City Council Approval		

Section A

GENERAL INFORMATION			
Development Name WAKEMED NORTH HEALTHPLEX EXPANSION			
Proposed Use HOSPITAL			
Property Address(es) 10000 FALLS OF NEUSE ROAD			
Wake County Property Identification Number(s) for each parcel to which these guidelines will apply:			
P.I.N. 1718952829	P.I.N.	P.I.N.	P.I.N.

What is your project type? ☐ Apartment ☐ Banks ☐ Elderly Facilities ☒ Hospitals ☐ Hotels/Motels ☐ Industrial Building ☐ Mixed Residential ☐ Non-Residential Condo ☐ Office ☐ Religious Institutions ☐ Residential Condo ☐ Retail ☐ School ☐ Shopping Center ☐ Single Family ☐ Telecommunication Tower ☐ Townhouse ☐ Other: If other, please describe:

PRELIMINARY ADMINISTRATIVE REVIEW	Per City Code Section 10-2132.2, summarize the reason(s) this plan can be reviewed administratively not requiring Planning Commission or City Council approval.
PLANNING COMMISSION OR CITY COUNCIL REVIEW	Per City Code Section 10-2132.2, summarize the reason(s) this plan requires Planning Commission or City Council Preliminary Approval.

CLIENT (Owner or Developer)	Company WAKEMED		
	Name (s) TOM CAVENDER		
	Address 3000 NEW BERN AVENUE		
	Phone (919)350-8098	Email TCAVENDER@WAKEMED.ORG	Fax (919)350-6739
CONSULTANT (Contact Person for Plans)	Company COLEJENEST & STONE		
	Name (s) DANIEL MCGLAMERY		
	Address 150 FAYETTEVILL STREET, SUITE 950		
	Phone (919)645-5968	Email DMCGLAMERY@COLEJENESTSTONE.COM	Fax

DEVELOPMENT TYPE & SITE DATA TABLE (Applicable to all developments)	
Has your project previously been through the pre-submittal process? If yes, provide the transaction #	
Zoning Information	**Building Information**
Zoning District(s) CUD O & I 1	Proposed building use(s) HOSPITAL
If more than one district, provide the acreage of each	Existing Building(s) sq. ft. gross 213,000 SQ FT
Overlay District	Proposed Building(s) sq. ft. gross 86,212 SQ FT
Total Site Acres 14.89 Inside City Limits ☐ Yes ☒ No	Total sq. ft. gross (existing & proposed) 299,212 SQ FT
Off street parking Required 320 Provided 854	Proposed height of building(s) 81'-4"
COA (Certificate of Appropriateness) case #	FAR (floor area ratio percentage) 46.1%
BOA (Board of Adjustment) case # A-	Building Lot Coverage percentage 16.3% (site plans only)
CUD (Conditional Use District) case # Z-106-97	
Stormwater Information	
Existing Impervious Surface 9.2 AC/401,064 SF acres/square feet	Flood Hazard Area ☐ Yes ☒ No
Proposed Impervious Surface 9.3 AC/405,432 SF acres/square feet	If Yes, please provide Alluvial Soils Flood Study FEMA Map Panel #
Neuse River Buffer ☐ Yes ☒ No Wetlands ☐ Yes ☒ No	
CONFORMITY WITH THE COMPREHENSIVE PLAN (Applicable to all developments)	
Provide a description of how your plan conforms to the guidelines of the Comprehensive Plan 2030	

FOR SUBDIVISIONS, MULTIFAMILY OR GROUP HOUSING PROJECTS ONLY	
1. Total # Of Townhouse Lots Detached Attached	11. Total number of Open Space (only) lots
2. Total # Of Single Family Lots	12. Total number of all lots
3. Total # Of Apartment Or Condominium Units	13. Is your project a cluster unit development? ☐ Yes ☐ No
4. Total # Of Congregate Care Or Life Care Dwelling Units	If Yes, please answer the questions below:
5. Total # Of Mobile Home Lots	a) Total number of Townhouse Lots
6. Total Number of Hotel Units	b) Total number of Single Family Lots
7. Overall Total # Of Dwelling Units (1-6 Above)	c) Total number of Group Housing Units
8. Bedroom Units 1br 2br 3br 4br or more	d) Total number of Open Space Lots e) Minimum Lot Size
9. Overall Unit(s)/Acre Densities Per Zoning District(s)	f) Total Number of Phases g) Perimeter Protective Yard Provided ☐ Yes ☐ No
10. If your project is an infill subdivision, provide the infill calculations per City Code 10-3032 on the front cover of your drawing sets	h) Must provide open space quotient per City Code 10-3071 (5)

SIGNATURE BLOCK (Applicable to all developments)

In filing this plan as the property owner(s), I/we do hereby agree and firmly bind ourselves, my/our heirs, executors, administrators, successors and assigns jointly and severally to construct all improvements and make all dedications as shown on this proposed subdivision plan as approved by the City.
I hereby designate ______________________ to serve as my agent regarding this application, to receive and respond to administrative comments, to resubmit plans on my behalf and to represent me in any public meeting regarding this application.
I/we have read, acknowledge and affirm that this project is conforming to all application requirements applicable with the proposed development use.
Signed ______________________ Date
Signed ______________________ Date

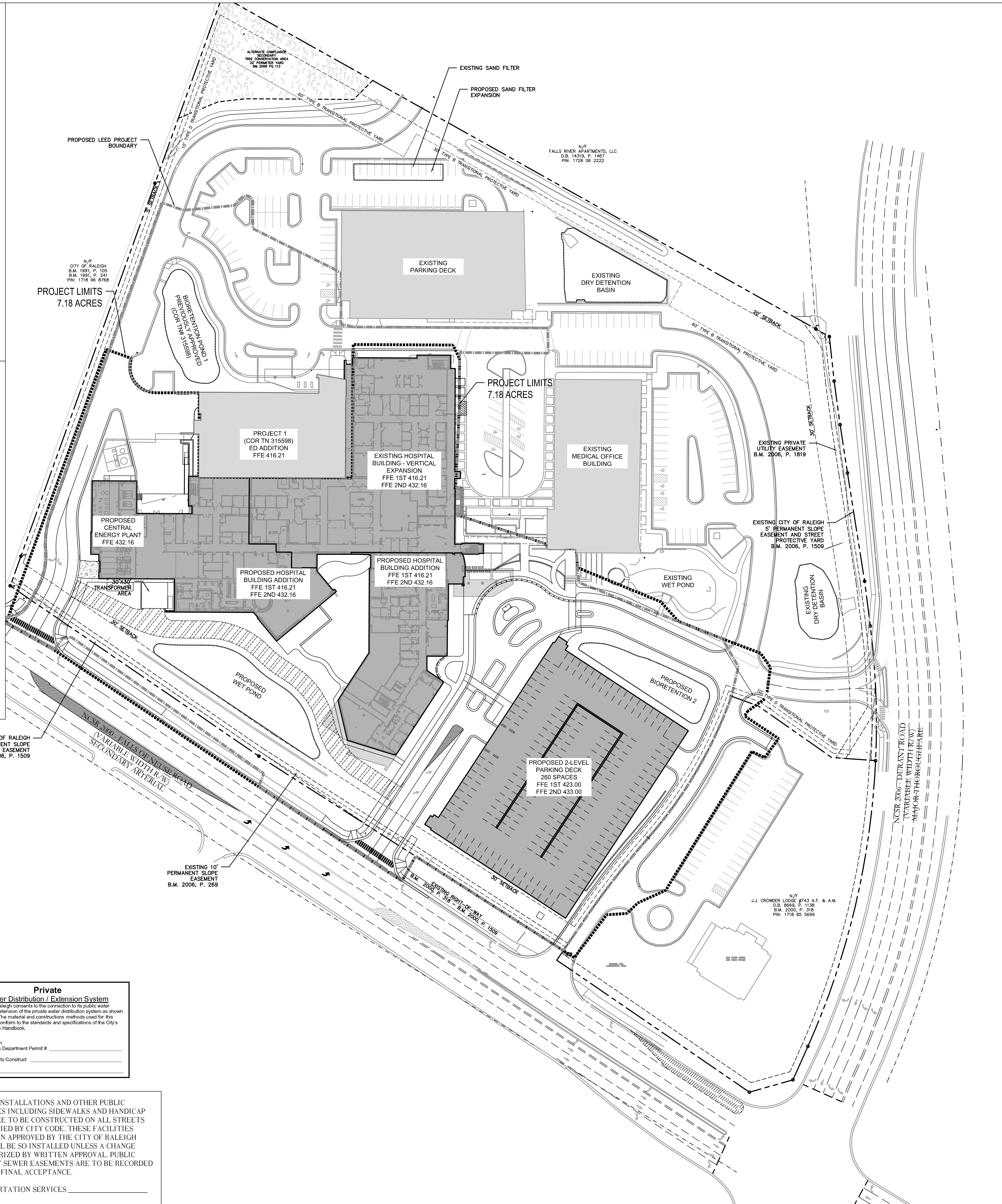

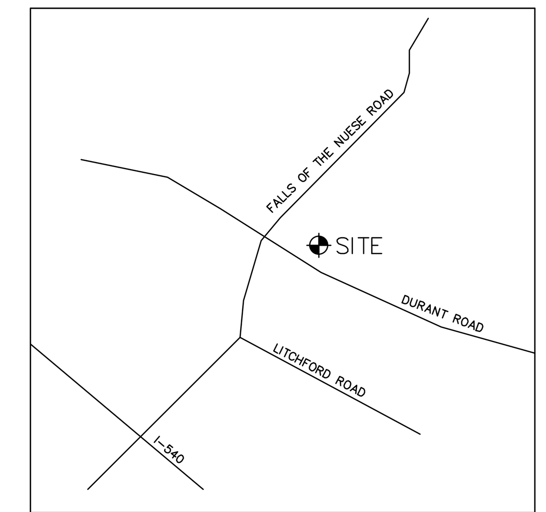

VICINITY MAP N.T.S.

BASE SURVEY INFORMATION OBTAINED FROM MULKEY ENGINEERS & CONSULTANTS, INC. THIS INFORMATION WAS ORIGINALLY ISSUED AND SEALED BY C. ANDREW HEATH, JR. PLS, NORTH CAROLINA LICENSE NO. L-3281, ON JUNE 13, 2011

CIVIL AND LANDSCAPE SHEET INDEX:

C100 OVERALL SITE PLAN
C101 EXISTING CONDITIONS
C102 DEMOLITION PLAN
C200 OVERALL STAKING AND MATERIALS PLAN
C201 STAKING AND MATERIALS PLAN
C202 STAKING AND MATERIALS PLAN
C203 STAKING AND MATERIALS PLAN
C400 OVERALL GRADING AND DRAINAGE PLAN
C401 GRADING AND DRAINAGE PLAN
C402 GRADING AND DRAINAGE PLAN
C403 GRADING AND DRAINAGE PLAN
C600 OVERALL WATER DISTRIBUTION AND SANITARY SEWER PLAN
C601 WATER DISTRIBUTION AND SANITARY SEWER PLAN
C602 WATER DISTRIBUTION AND SANITARY SEWER PLAN
C603 WATER DISTRIBUTION AND SANITARY SEWER PLAN
C700 OVERALL PLANTING PLAN
C701 PLANTING PLAN
C702 PLANTING PLAN
C703 PLANTING PLAN
C800 SITE DETAILS
C801 SITE DETAILS
C802 SITE DETAILS
C803 SITE DETAILS
A200 BUILDING ELEVATIONS
A201 BUILDING ELEVATIONS
A210 BUILDING ELEVATIONS
A211 BUILDING ELEVATIONS
A212 BUILDING ELEVATIONS

GENERAL NOTES

1) THE CONTRACTOR SHALL VERIFY THE LOCATION, DEPTH, AND EXISTENCE OF ALL UTILITIES WITHIN THE CONSTRUCTION AREA PRIOR TO ANY EXCAVATION. THE OMISSION OF, OR INCLUSION OF UTILITY LOCATIONS ON THE PLANS IS NOT TO BE CONSIDERED AS THE NONEXISTENCE, OR DEFINITE LOCATION OF EXISTING UNDERGROUND UTILITIES. ANY DAMAGE TO EXISTING UNDERGROUND UTILITIES SHALL BE REPAIRED AT THE CONTRACTOR'S EXPENSE.

2) ALL CONSTRUCTION SHALL BE DONE IN ACCORDANCE WITH ALL CITY OF RALEIGH AND NCDOT STANDARDS AND SPECIFICATIONS.

PUBLIC UTILITY NOTES:

1. THERE WILL BE NO PUBLIC IMPROVEMENTS AS A PART OF THIS PROJECT.

PHASE NUMBER(S)	1
NUMBER OF LOT(S)	1
LOT NUMBER(S) BY PHASE	1
NUMBER OF UNITS	N/A
LIVABLE BUILDINGS	NO
OPEN SPACE	N/A
NUMBER OF OPEN SPACE LOTS	0
PUBLIC WATER (LF)	0
PUBLIC SEWER (LF)	0
PUBLIC STREET (LF)	0
PUBLIC SIDEWALK (LF)	329

ZONING CODE SUMMARY

PROJECT NAME: WAKEMED NORTH HEALTHPLEX EXPANSION
OWNER: WAKEMED — OWNER PHONE #: (919) 350-8098
PLANS PREPARED BY: COLEJENEST & STONE — CJS PHONE #: (919) 719-1800
WAKE COUNTY PIN: 1718952829 — JURISDICTION: CITY OF RALEIGH

ZONING:
EX: CUD O & I
PR: CUD O & I
BUILDING HEIGHT:
MAX: 55'
EX: 34'
PR: 81'-4"
BUILDING COVERAGE:
EX: 78,490 SF
PR: 27,481 SF
TOT: 105,971 SF

LAND USE:
EX: INSTITUTIONAL
PR: INSTITUTIONAL
STORIES:
MAX: N/A
EX: 2
PR: 5
GROSS FLOOR AREA:
EX: 213,000 SF
PR: 86,212 SF
TOTAL: 299,212 SF
% CHANGE: 28.8% INCREASE

LOT SIZE: 14.89 AC
IMPERVIOUS COVER:
EX: 9.2 AC.
PR: 9.3 AC.

FLOOR AREA RATIO (PER SEC 10-2035(d)(1)c. OFFICE AND INSTITUTIONAL 1, AREA BULK DENSITY, HEIGHT REQUIREMENTS.
MX: 75.0%
EX: 32.8%
PR: 46.1%

BUILDING LOT COVERAGE: (PER SEC 10-2002. ALL PRINCIPAL BUILDINGS EXCLUDING VEHICULAR SURFACE AREAS, PARKING STRUCTURES, UNCOVERED PAVED AREAS AND OTHER ACCESSORY STRUCTURES
MX: 30.0%
EX: 12.1%
PR: 16.3%

PARKING DATA: (PER CITY OF RALEIGH CODE OF ORDINANCES; SEC 10-2081(a) SCHEDULE OF OFF-STREET PARKING STANDARDS; INSTITUTION/CIVIC/SERVICES; ALL OFFICE 1 SPACE / 300 SF)

EXISTING REQUIRED:	710*	EXISTING PARKING:	723
PROPOSED REQUIRED:	320**	PROPOSED PARKING:	131
HANDICAP REQUIRED:	16	TOTAL PARKING:	854
5' HANDICAP REQUIRED:	14		
5' HANDICAP PROVIDED:	16	TOTAL HANDICAP PARKING:	22
8' HANDICAP REQUIRED:	2		
8' HANDICAP PROVIDED:	6		

* 213,000 SF x 1 SPACE / 300 SF = 710 SPACES
**HOSPITAL (PR. 100 BEDS): 1 SPACE / 2 BEDS = 50 SPACES
**MEDICAL OFFICE (EX. 81,000 SF): 1 SPACE / 300 SF = 270 SPACES

BUILDING SETBACKS:		REQUIRED BUFFERS:	
STREET YARD:	30'	FRONT (N):	5'
SIDE YARD:	5'	SIDE (E):	5'
REAR YARD:	20'	REAR (S):	0'
		SIDE (W):	0'

REQUIRED SCREENING:
SEE SHEET C700 OVERALL LANDSCAPE PLAN FOR REQUIRED SCREENING

YARD REQUIREMENTS
SEE SHEET C700 OVERALL LANDSCAPE PLAN FOR TRANSITIONAL AND STREET YARD PROTECTIVE REQUIREMENTS

INTERIOR LANDSCAPING:
(SEE SHEET C700 OVERALL LANDSCAPE PLAN FOR INTERIOR LANDSCAPING)

SOLID WASTE SERVICES
THE SITE IS CURRENTLY SERVED BY A PRIVATE HAULER. THE OWNER ACKNOWLEDGES THAT THEY MUST BE IN COMPLIANCE WITH THE REQUIREMENTS OF THE CITY OF RALEIGH SOLID WASTE DESIGN MANUAL.

Private
Sewer Collection / Extension System

The City of Raleigh consents to the connection to its public sewer system and extension of the private sewer collection system as shown on this plan. The material and constructions methods used for this project shall conform to the standards and specifications of the City's Public Utilities Handbook.

City of Raleigh
Public Utilities Department Permit # ______________
Authorization to Construct ______________
Date ______________

Private
Water Distribution / Extension System

The City of Raleigh consents to the connection to its public water system and extension of the private water distribution system as shown on this plan. The material and constructions methods used for this project shall conform to the standards and specifications of the City's Public Utilities Handbook.

City of Raleigh
Public Utilities Department Permit # ______________
Authorization to Construct ______________
Date ______________

ATTENTION CONTRACTORS

The ***Construction Contractor*** responsible for the extension of water, sewer and/or reuse, as approved in these plans, is responsible for ***contacting*** the ***Public Works Department*** at ***(919) 996-6810***, and the ***Public Utilities Department*** at **(919) 996-4540** at least ***twenty four hours*** prior to beginning any of their construction.

Failure to notify both ***City Departments*** in advance of beginning construction, will result in the issuance of ***Monetary Fines***, and require reinstallation of any water or sewer facilities not inspected as a result of this notification failure.

Failure to call for ***Inspection***, ***Install a Downstream Plug***, have ***Permitted Plans*** on the ***Jobsite***, or any other ***Violation*** of ***City of Raleigh Standards*** will result in a ***Fine and Possible Exclusion*** from future work in the ***City of Raleigh***.

UTILITY INSTALLATIONS AND OTHER PUBLIC FACILITIES INCLUDING SIDEWALKS AND HANDICAP RAMPS ARE TO BE CONSTRUCTED ON ALL STREETS AS SPECIFIED BY CITY CODE. THESE FACILITIES HAVE BEEN APPROVED BY THE CITY OF RALEIGH AND SHALL BE SO INSTALLED UNLESS A CHANGE IS AUTHORIZED BY WRITTEN APPROVAL. PUBLIC SANITARY SEWER EASEMENTS ARE TO BE RECORDED PRIOR TO FINAL ACCEPTANCE.

TRANSPORTATION SERVICES ______________
PUBLIC UTILITIES ______________
CONSERVATION ENGINEER ______________
PLANNING ______________

CITY OR RALEIGH INFRASTRUCTURE SUBMITTAL TRANSACTION NUMBER XXXXXX
CITY OR RALEIGH SITE SUBMITTAL TRANSACTION NUMBER XXXXXXX

CLIENT

WakeMed Health & Hospitals

WAKEMED NORTH HOSPITAL

10000 FALLS OF NEUSE ROAD
RALEIGH, NORTH CAROLINA 27614

DESIGNER

BBH DESIGN
PO BOX 12697
RESEARCH TRIANGLE PARK
NORTH CAROLINA 27709
T.919.460.6700
F.919.460.6733
www.bbh-design.com

© 2010, BBH Design, PA
Duplication or reproduction by any means without the express written consent of BBH Design, PLLC is a violation of Federal and international law. The information contained on this document is the intellectual property of BBH Design, PA and all rights thereto are Reserved. For exceptions, refer to the Owner-Architect Agreement.

CONSULTANTS

ColeJenest & Stone
Raleigh Charlotte Wilmington
Shaping the Environment Realizing the Possibilities
Land Planning + Landscape Architecture + Civil Engineering + Urban Design
150 Fayetteville Street, Suite 950 Raleigh, NC 27601 p+ 919 719 1800 f+ 919 719 1819 url+ www.colejeneststone.com

REGISTRATION

NOT FOR CONSTRUCTION
NOT FOR FINAL PRICING

ISSUE

No.	Date	Description

PROJECT NO:	P1118.00
CAD FILE:	
DRAWN BY:	Author
CHECKED BY: Checker	QC BY:
SCALE:	
DATE:	04/16/2012 DESIGN DEVELOPMENT

KEY PLAN

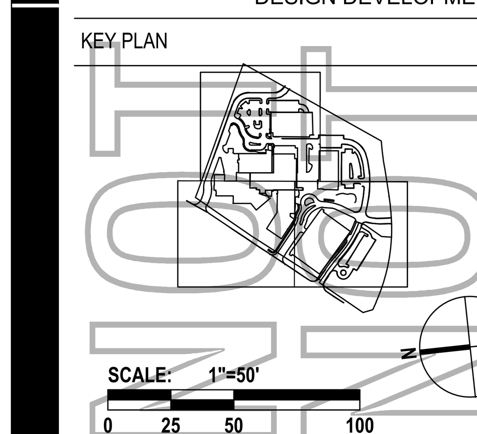

SCALE: 1"=50'
0 25 50 100

SHEET TITLE

OVERALL SITE PLAN

C100