Standard Reuse Drawing Details

R-1 Temporary Reuse Main Blow Off Assembly

R-2 Permanent Reuse Main Blow Off Assembly

R-3a Trench Bottom Dimensions & Backfilling Requirements for PVC

R-3b Trench Bottom Dimensions & Backfilling Requirements for DIP

R-4a Thrust Blocking Design Data for DIP

R-4b Thrust Blocking Design Data for DIP

R-5 Standard Thrust Block Installation for 16” and Larger Valves

R-6 Standard Thrust Blocking Views

R-7 Thrust Blocking Design Quantity Table

R-8 Thrust Blocking Design Quantity Table

R-9 Standard Vertical Bend

R-10 Standard Main and Valve Markers in Easements

R-11 4” – 24” Standard Tapping Sleeve and Valve Assembly

R-12 Valve Restraint at Tees and Crosses for Lines 4” – 24”

R-13 Butterfly Valve

R-14 Reclaimed Water Valve and Box installation

R-15 Standard Valve Box

R-16 Standard Reuse Air Release Valve

R-17 Standard Manhole Cover

R-18 Standard 1” Reclaimed Water Service and Meter Box Installation

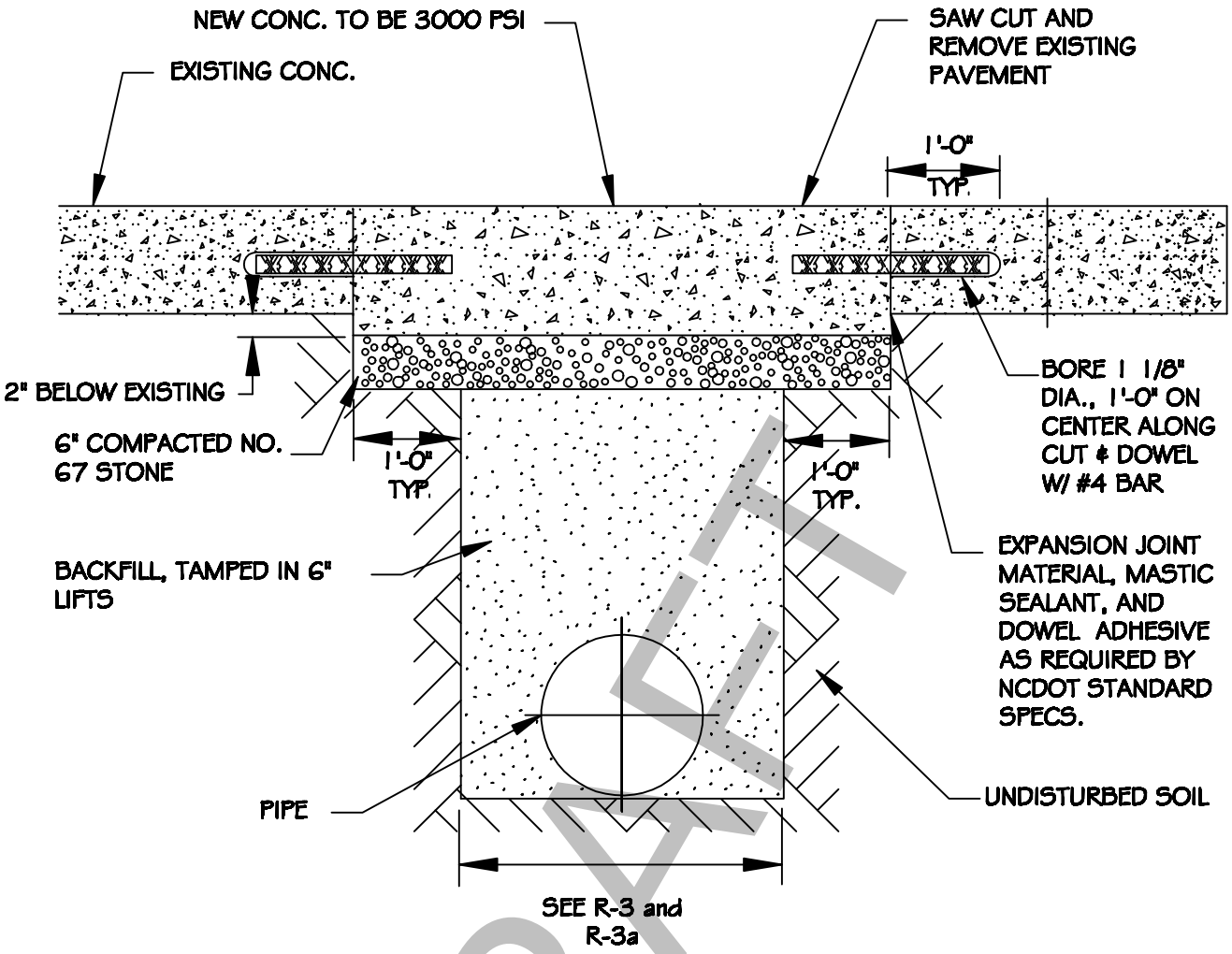

DRAFT

NOTES:

1. SEE CITY OF RALEIGH STANDARDS FOR TRENCHES AND PIPE BEDDING DETAILS R-3- R-3A FOR ADDITIONAL DETAILS.
2. PAVEMENT CUTS WITHIN NCDOT ROW SHALL CONFORM TO THE APPROVED ON SITE ENCROACHMENT PERMIT.
3. THE PAVEMENT CUT SHALL BE DEFINED BY A STRAIGHT EDGE AND CUT WITH AN APPROVED SAW CUT MACHINE.
4. THE TRENCH SUBGRADE MATERIAL SHALL BE BACKFILLED WITH SUITABLE MATERIAL AND COMPACTED TO A DENSITY OF AT LEAST 95% OF THAT OBTAINED BY COMPACTING A SAMPLE OF THE MATERIAL IN ACCORDANCE WITH AASHTO T-99 AS MODIFIED BY NCDOT.
5. THE FINAL 6" OF FILL SHALL CONSIST OF ABC MATERAIL COMPACTED TO A DENSITY EQUAL TO 100% OF THAT OBTAINED BY COMPACTING A SAMPLE OF THE MATERIAL IN ACCORDANCE WITH AASHTO T-80 AS MODIFIED BY NCDOT.

CITY OF RALEIGH

DEPARTMENT OF PUBLIC UTILITIES

STANDARD CONCRETE PAVEMENT PATCH DETAIL

DWG. NO.	REVISIONS	DATE	REVISIONS	DATE
R-1	RRH	3-31-00	J.P.S	10-1-10
	A.B.B.	2-8-05		

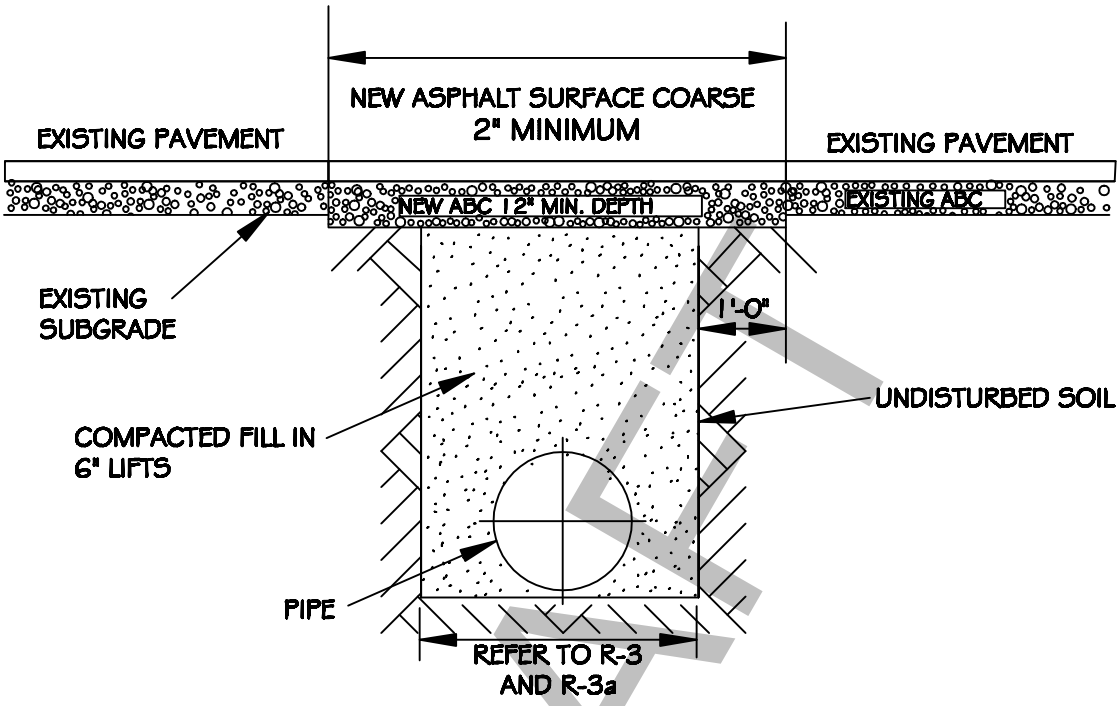

DRAFT

NOTES:

1. THE PAVEMENT CUT SHALL BE DEFINED BY A STRAIGHT EDGE AND CUT WITH AN APPROVED SAW CUT MACHINE.
2. THE TRENCH SUBGRADE MATERIAL SHALL BE BACKFILLED WITH SUITABLE MATERIAL AND COMPACTED TO A DENSITY OF AT LEAST 95% OF THAT OBTAINED BY COMPACTING A SAMPLE OF THE MATERIAL IN ACCORDANCE WITH AASHTO T-99 AS MODIFIED BY NCDOT.
3. THE FINAL 1' OF FILL SHALL CONSIST OF ABC MATERIAL COMPACTED TO A DENSITY EQUAL TO 100% OF THAT OBTAINED BY COMPACTING A SAMPLE OF THE MATERIAL IN ACCORDANCE WITH AASHTO T-80 AS MODIFIED BY NCDOT.
4. THE ENTIRE THICKNESS/ VERTICAL EDGE OF CUT SHALL BE TACKED.
5. THE SAME DEPTH OF PAVEMENT MATERIAL WHICH EXISTS SHALL BE REINSTALLED, BUT IN NO CASE SHALL THE ASPHALT BE LESS THAN 2" THICK.
6. THE ASPHALT PAVEMENT MATERIAL SHALL BE INSTALLED AND COMPACTED THOROUGHLY WITH A SMOOTH DRUM ROLLER TO ACHIEVE A SMOOTH LEVEL PATCH.
7. REFER TO CITY OF RALEIGH STANDARDS FOR TRENCHES AND PIPE BEDDING, R-3 AND R-3A. FOR ADDITIONAL DETAILS.
8. NO HAND PATCHING ALLOWED.
9. PAVEMENT CUTS WITHING NCDOT ROW SHALL FONFORM TO THE APPROVED ON SITE ENCROACHMENT PERMIT.

CITY OF RALEIGH

DEPARTMENT OF PUBLIC UTILITIES

STANDARD ASPHALT
PAVEMENT PATCH DETAIL

DWG. NO.	REVISIONS	DATE	REVISIONS	DATE
R-2	RRH	3-31-00	A.B.B.	4-16-04
	DWC	11-1-99	J.P.S.	10-1-10

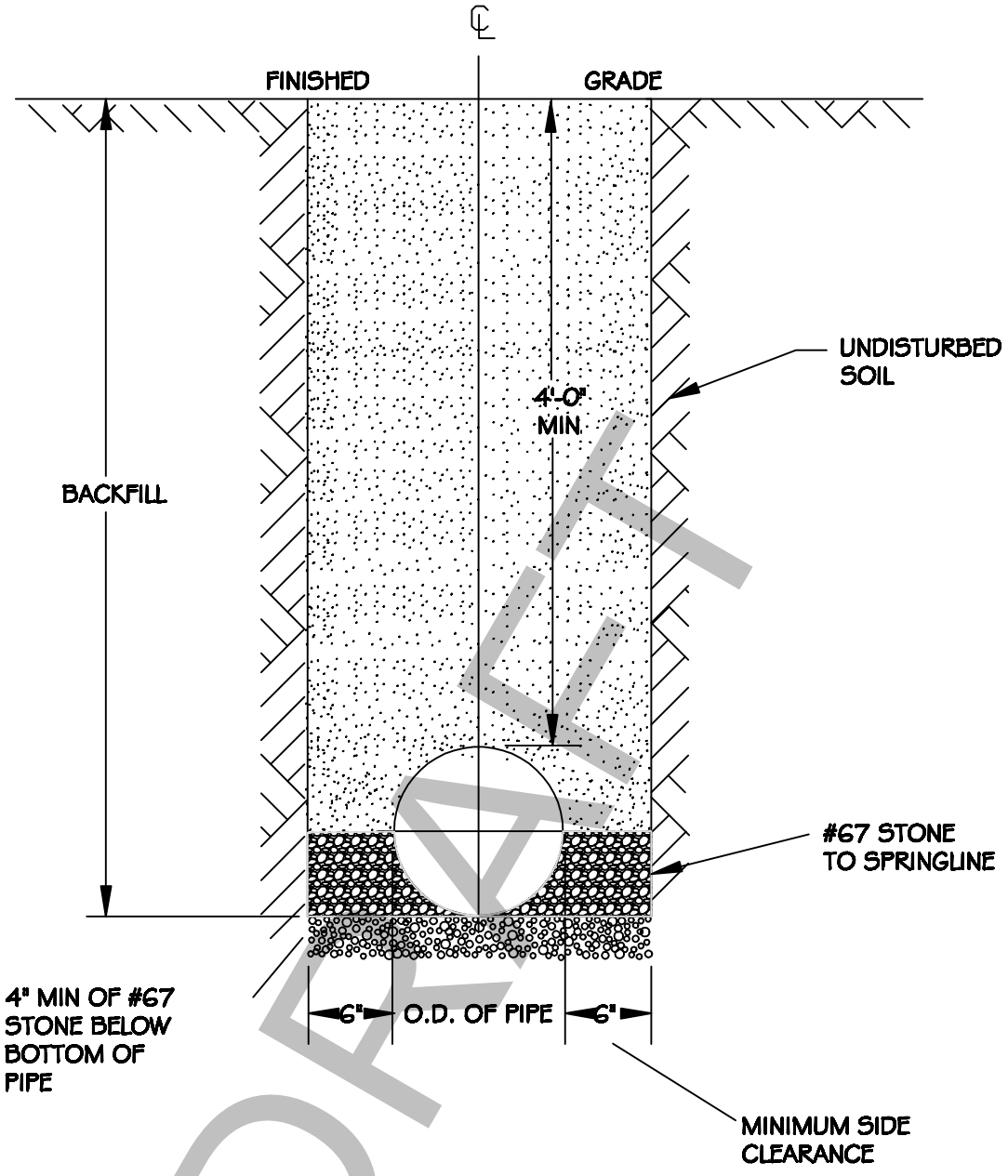

DRAFT

NOTES:
1. TRENCHES REQUIRING SHORING AND BRACING, DIMENSIONS SHALL BE TAKEN FROM THE INSIDE FACE OF THE SHORING AND BRACING.
2. NO ROCKS OR BOULDERS 4" OR LARGER TO BE USED IN BACKFILL.
3. ALL BACKFILL MATERIAL SHALL BE SUITABLE NATIVE MATERIAL.
4. BACKFILL SHALL BE TAMPED IN 6" LIFTS.
5. ACHIEVE 95% COMPACTION IN BACKFILL.

CITY OF RALEIGH

DEPARTMENT OF PUBLIC UTILITIES

TRENCH BOTTOM DIMENSIONS & BACKFILLING REQUIREMENTS FOR PVC REUSE MAINS

DWG. NO.	REVISIONS	DATE	REVISIONS	DATE
R-3a	D.W.C.	9-3-99	ABB	2-15-05
	RRH	3-31-00	J.P.S	10-1-10

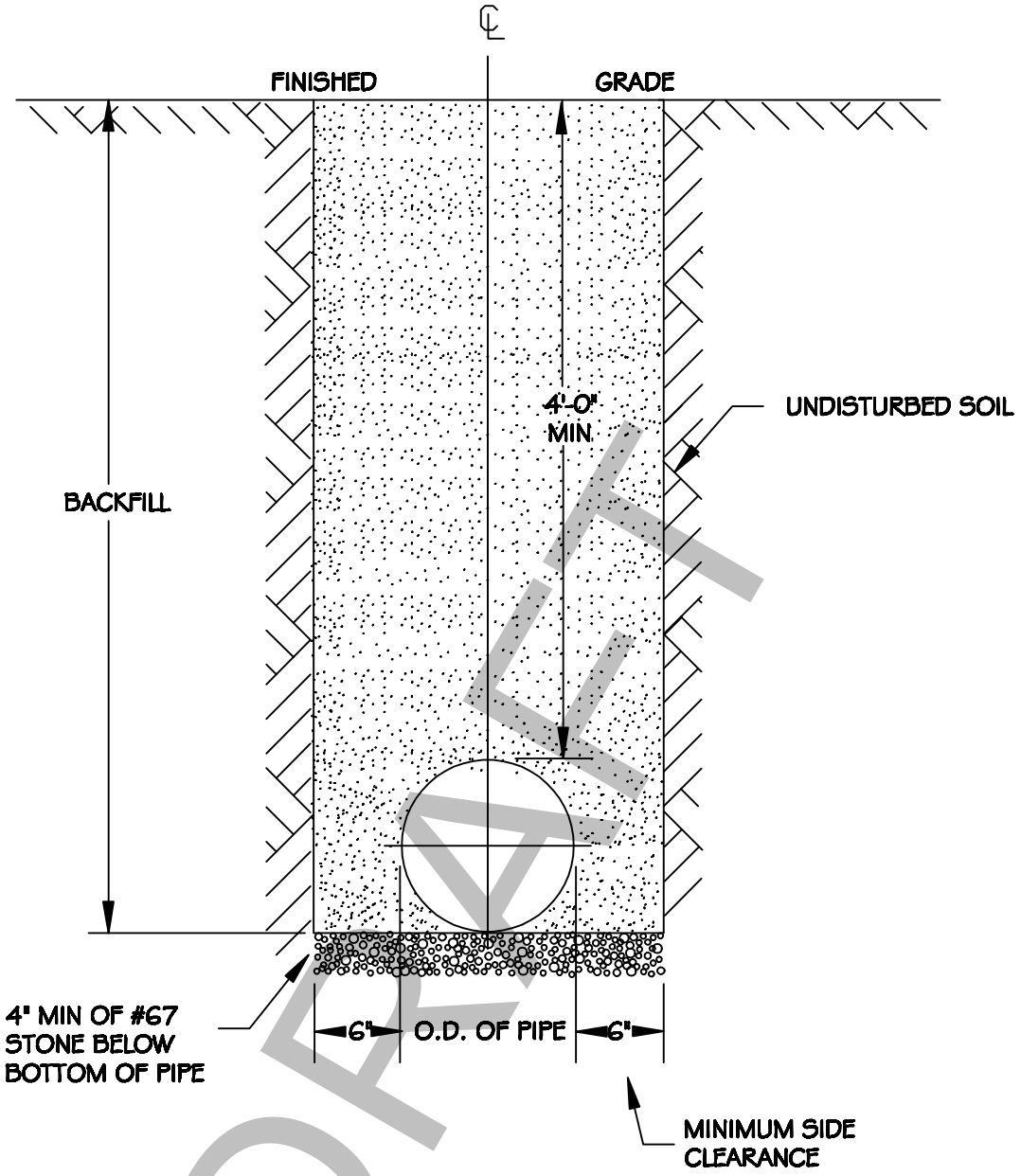

DRAFT

NOTES:
1. TRENCHES REQUIRING SHORING AND BRACING, DIMENSIONS SHALL BE TAKEN FROM THE INSIDE FACE OF THE SHORING AND BRACING.
2. NO ROCKS OR BOULDERS 4" OR LARGER TO BE USED IN BACKFILL.
3. ALL BACKFILL MATERIAL SHALL BE SUITABLE NATIVE MATERIAL.
4. BACKFILL SHALL BE TAMPED IN 6" LIFTS.
5. ACHIEVE 95% COMPACTION IN BACKFILL.

CITY OF RALEIGH

DEPARTMENT OF PUBLIC UTILITIES

TRENCH BOTTOM DIMENSIONS & BACKFILLING REQUIREMENTS FOR DUCTILE IRON REUSE MAINS

DWG. NO.	REVISIONS	DATE	REVISIONS	DATE
R-3b	D.W.C.	9-3-99	ABB	2-15-05
	RRH	3-31-00	J.P.S	10-1-10

REINFORCING REQUIREMENTS

I.D. PIPE	REBAR SIZE	"X" BAR LENGTH	"X" BAR WEIGHT	"Y" BAR LENGTH	"Y" BAR WEIGHT	NO. REQUIRED
6" - 36"	#5	2'-2"+ O.D. PIPE	1.043 LBS/FT	1'-1"	1.1 LBS. EACH	X-24, Y-12
48" & greater	#6	3'-0"+ O.D. PIPE	1.502 LBS/FT	1'-3"	1.9 LBS. EACH	X-24, Y-12

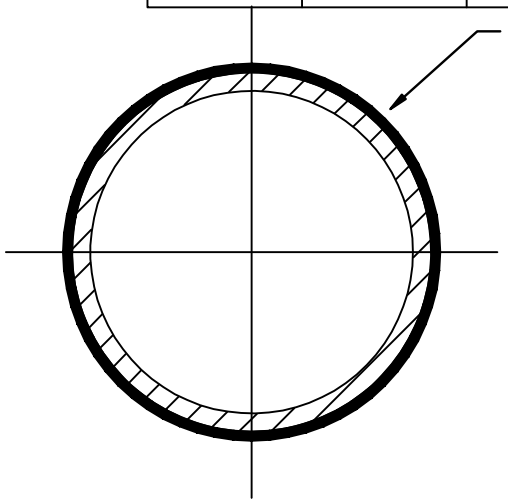

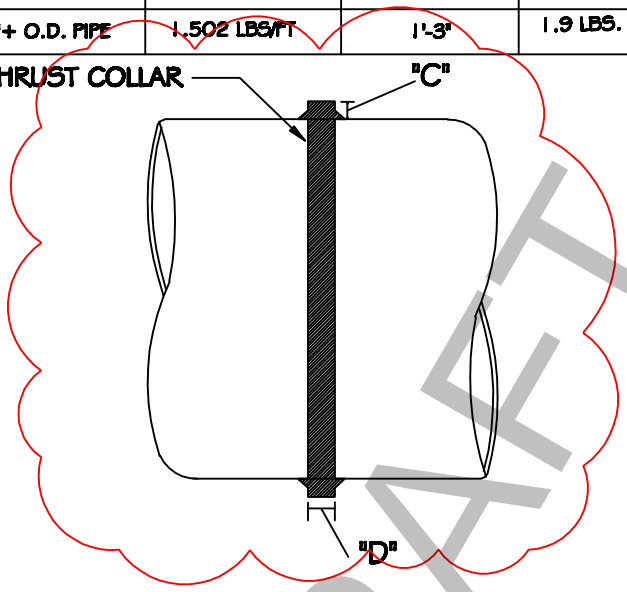

NOTES:
1. SEE STANDARD DETAIL R-6 FOR THRUST BLOCK LOCATIONS.
2. CONCRETE SHALL BE 3000 PSI AND TRANSIT MIXED. .
3. REINFORCING BARS SHALL BE DEFORMED AND TIED TOGETHER.
4. TRENCH BOTTOM WIDTH IN VICINITY OF THRUST BLOCK INSTALLATION SHALL BE THE MINIMUM WIDTH AS SHOWN ON STANDARD DETAIL R-3a.
5. BACKFILL TAMPED IN 6" LIFTS PER STANDARD DETAIL R-3a.
6. THRUST COLLAR MUST BE FACTORY WELDED ON BOTH SIDES ALONG BOTH EDGES OF COLLAR AROUND CIRCUMFERENCE.

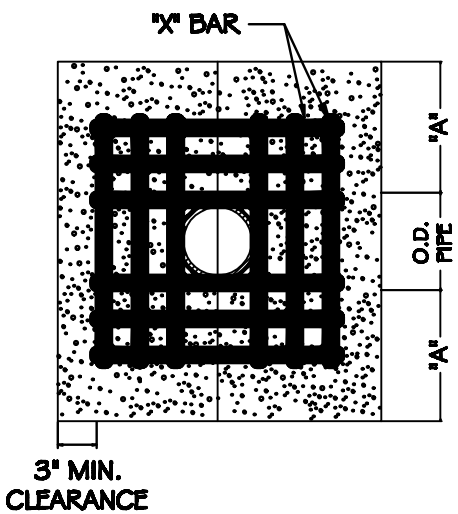

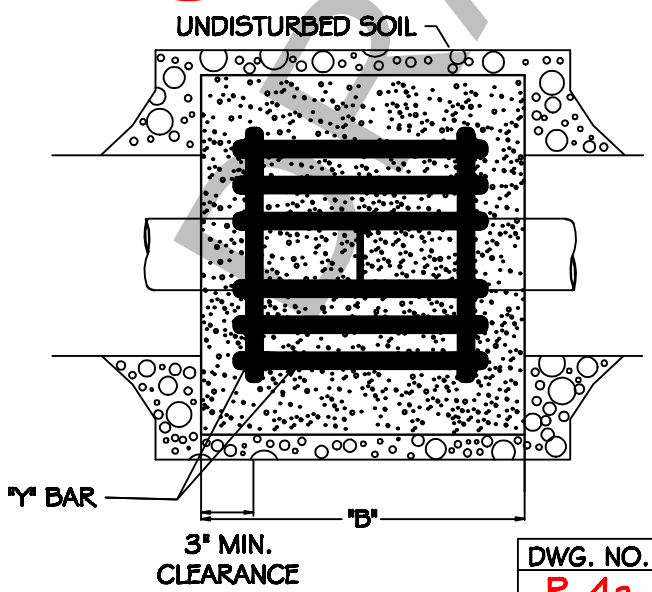

THRUST COLLAR, AND THRUST SCHEDULE

I.D. PIPE	"A"	"B"	"C"	"D"
6" - 16"	1'-4"	1'-7"	2"	3/8"
20" - 24"	1'-4"	1'-7"	3"	1/2"
30" - 36"	1'-4"	1'-7"	4"	5/8"
48" & greater	1'-8"	1'-9"	6"	7/8"

CITY OF RALEIGH

DEPARTMENT OF PUBLIC UTILITIES

THRUST BLOCKING DESIGN DATA FOR DI REUSE MAINS

DWG. NO.	REVISIONS	DATE	REVISIONS	DATE
R-4a	RRH	1-21-00	J.P.S.	10-1-10
	D.H.L.	6-18-08		

DRAFT

REINFORCING REQUIREMENTS

I.D. PIPE	REBAR SIZE	"X" BAR LENGTH	"X" BAR WEIGHT	"Y" BAR LENGTH	"Y" BAR WEIGHT	NO. REQUIRED
6" - 36"	#5	2'-2"+ O.D. PIPE	1.043 LBS/FT	1'-1"	1.1 LBS. EACH	X-24, Y-12
48" ϕ greater	#6	3'-0"+ O.D. PIPE	1.502 LBS/FT	1'-3"	1.9 LBS. EACH	X-24, Y-12

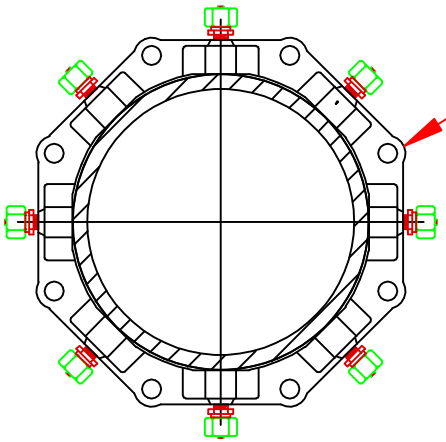

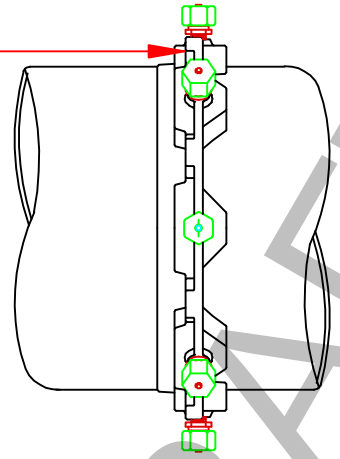

NOTES:

1. SEE STANDARD DETAIL R-6 FOR THRUST BLOCK LOCATIONS.
2. CONCRETE SHALL BE 3000 PSI AND TRANSIT MIXED. .
3. REINFORCING BARS SHALL BE DEFORMED AND TIED TOGETHER.
4. TRENCH BOTTOM WIDTH IN VICINITY OF THRUST BLOCK INSTALLATION SHALL BE THE MINIMUM WIDTH AS SHOWN ON STANDARD DETAIL R-3b.
5. BACKFILL TAMPED IN 6" LIFTS PER STANDARD DETAIL R-3b.
6. MECHANICAL RESTAINING COLLAR SHALL BE AS MANUFACTURED BY MEGA-LUG OR EQUAL.

DRAFT

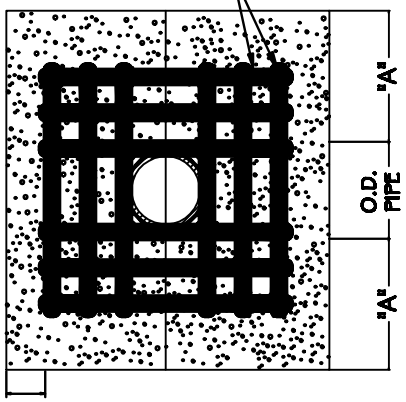

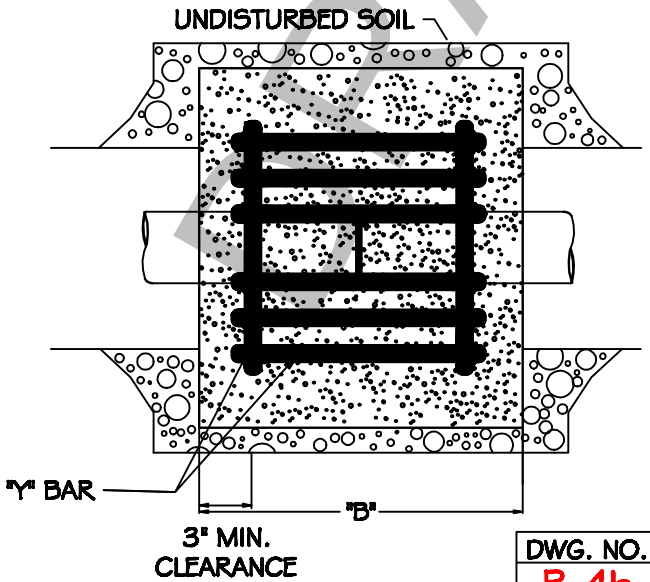

THRUST COLLAR, AND THRUST SCHEDULE

I.D. PIPE	"A"	"B"
6" - 16"	1'-4"	1'-7"
20" - 24"	1'-4"	1'-7"
30" - 36"	1'-4"	1'-7"
48" ϕ greater	1'-8"	1'-9"

CITY OF RALEIGH

DEPARTMENT OF PUBLIC UTILITIES

THRUST BLOCKING DESIGN DATA
FOR DI REUSE MAINS

DWG. NO.	REVISIONS	DATE	REVISIONS	DATE
R-4b	RRH	1-21-00	J.P.S.	10-1-10
	D.H.L.	6-18-08		

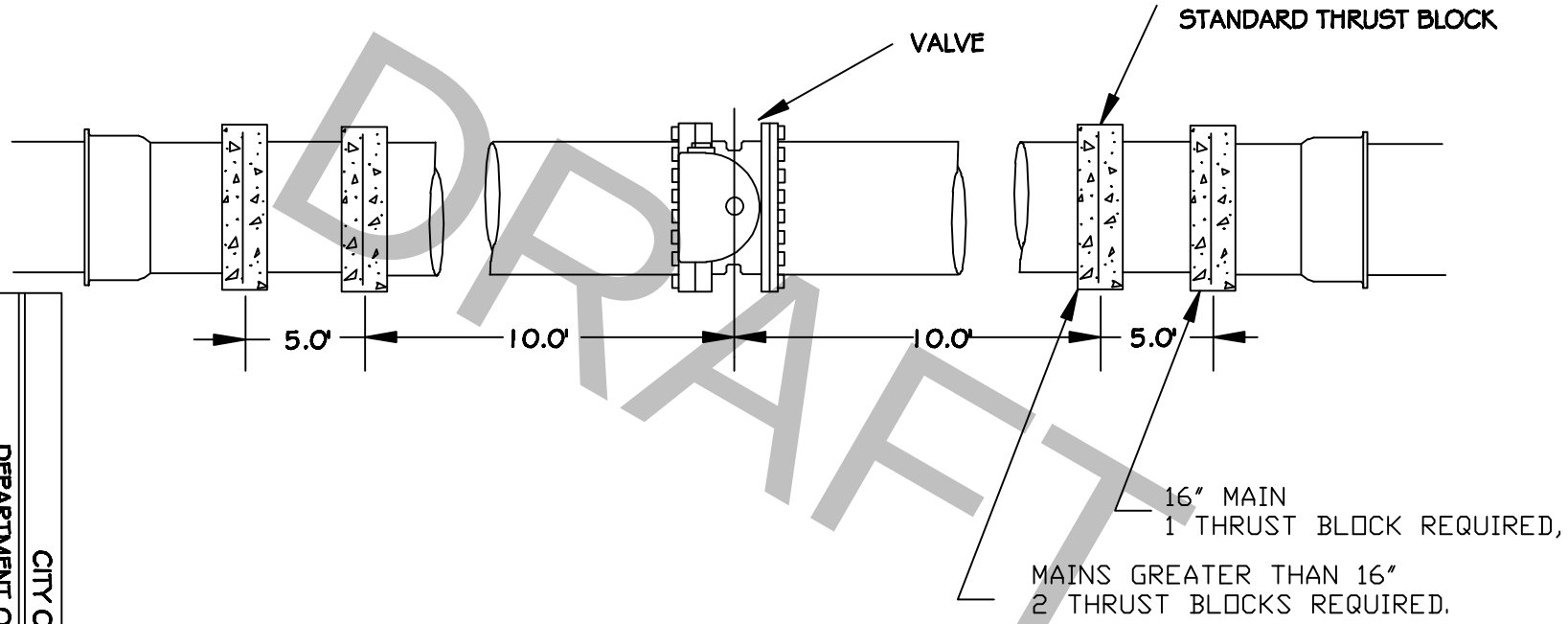

DRAFT

THRUST BLOCKING AT VALVES 16" AND LARGER

CITY OF RALEIGH

DEPARTMENT OF PUBLIC UTILITIES

STANDARD THRUST BLOCK INSTALLATION FOR 16" AND LARGER VALVES AND DEAD END REUSE MAINS

DWG. NO.	REVISIONS	DATE	REVISIONS	DATE
R-5	Y.C.A.	4-12-90	RRH	3-31-00
	D.W.C.	9-7-99	J.P.S.	10-1-10

THRUST BLOCKING

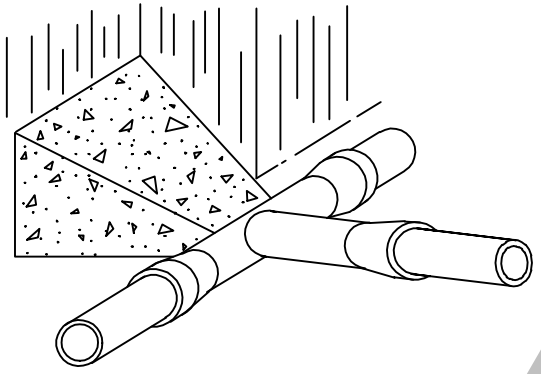

TEE INTERSECTION

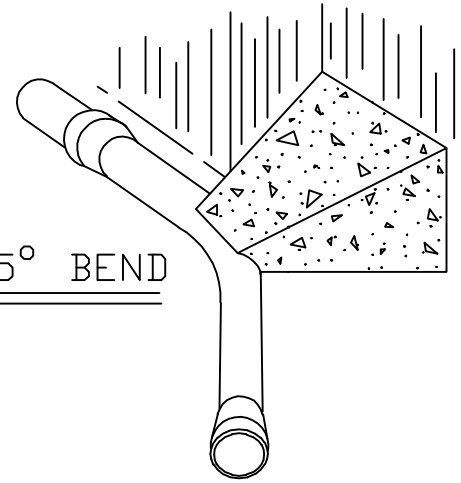

45° BEND

** Allow use of 90° bend.

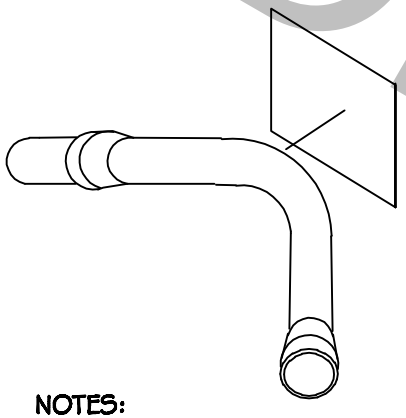

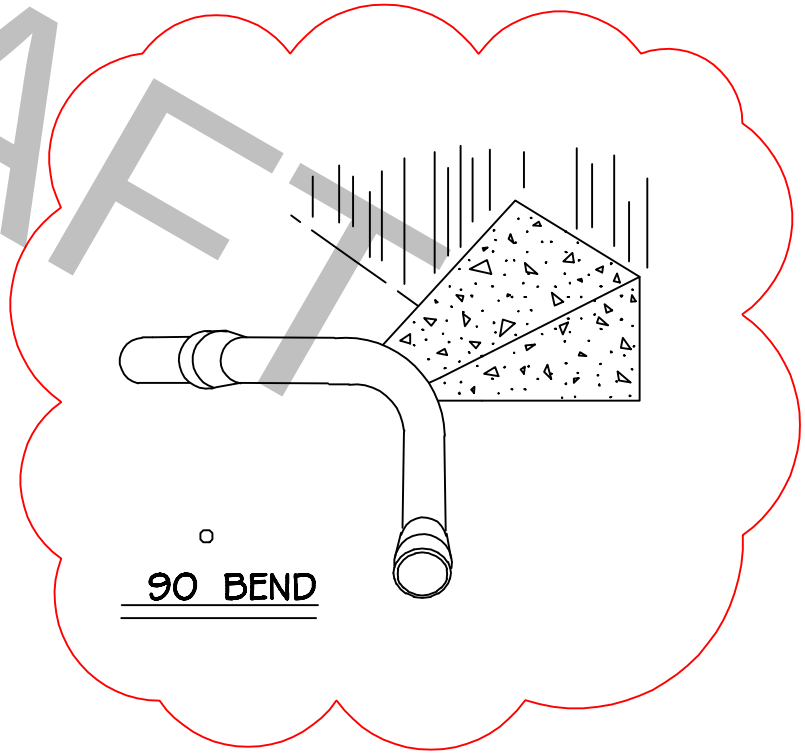

90° BEND

NOTES:

1. CONCRETE SHALL BE 3000 PSI
2. CONCRETE SHALL NOT CONTACT BOLTS OR ENDS OF MECHANICAL JOINT FITTINGS.
3. TRENCHES SHALL CONFORM TO STANDARD DETAIL R-3a AND R-3b.
4. SEE STANDARD THRUST BLOCK TABLES, R-7 THRU R-8, FOR AREA OF CONCRETE REQUIRED.
5. ALL BENDS AND INTERSECTIONS SHALL HAVE CONCRETE THRUST BLOCKING.

DRAFT

CITY OF RALEIGH

DEPARTMENT OF PUBLIC UTILITIES

STANDARD THRUST BLOCKING VIEWS

DWG. NO.	REVISIONS	DATE	REVISIONS	DATE
R-6	D.W.C.	9-7-99	D.H.L.	6-18-08
	R.R.H.	3-31-00	J.P.S.	10-1-10

REACTION BEARING AREAS FOR HORIZONTAL REUSE PIPE BENDS

BASED ON TEST PRESSURE OF 200 P.S.I.

ALL AREAS GIVEN IN SQUARE FEET.

SIZE AND DEGREE OF BEND	STATIC THRUST IN POUNDS	MODERATELY DRY CLAY 4000 LBS/FT 2	SOFT CLAY 2000 LBS/FT 2	1600 LBS/FT 2 GRAVEL / COARSE SAND	8000 LBS/FT2 DRY CLAY - ALWAYS DRY	SAND, COMPACT FIRM 8000 LBS/FT 2	SAND -CLEAN DRY 4000 LBS/FT 2	SOIL 1000 LBS/FT 2 QUICKSAND - VERY POOR	ROCK - POOR 10,000 LBS/FT 2
6"									
11 1/4°	1,108	1	1	1	1	1	1	2	1
22 1/2°	2,207	1	2	2	1	1	1	3	1
45°	4,328	2	3	3	1	1	2	5	1
90°	7,996	2	4	5	1	1	2	8	1
PLUG	5,655	2	3	4	1	1	2	6	1
8"									
11 1/4°	1,970	1	1	2	1	1	1	2	1
22 1/2°	3,922	1	2	3	1	1	1	4	1
45°	7,694	2	4	5	1	1	2	8	1
90°	14,215	4	8	9	2	2	4	15	2
PLUG	10,053	3	5	6	2	2	3	10	1
12"									
11 1/4°	4,433	2	3	3	1	1	2	5	1
22 1/2°	8,826	3	5	6	2	2	3	9	1
45°	17,312	5	9	11	3	3	5	18	2
90°	31,983	8	16	19	4	4	8	32	4
PLUG	22,619	6	12	14	3	3	6	23	3
16"									
11 1/4°	7,881	2	4	5	1	1	2	8	1
22 1/2°	15,691	4	8	10	2	2	4	16	2
45°	30,779	8	16	19	4	4	8	31	4
90°	56,861	15	29	35	8	8	15	57	6
PLUG	40,213	10	21	25	5	5	10	41	5

REACTION BEARING AREAS ARE IN SQUARE FEET MEASURED IN A VERTICAL PLANE IN THE TRENCH SIDE AT AN ANGLE OF 90° TO THE THRUST VECTOR.

USE 6" - 90° BEND VALUE FOR HYDRANTS FOR ADDITIONAL SAFETY FACTOR.

CITY OF RALEIGH

DEPARTMENT OF PUBLIC UTILITIES

THRUST BLOCKING DESIGN QUANTITY TABLE

DWG. NO.	REVISIONS	DATE	REVISIONS	DATE
R-7	D.W.C.	6-23-99		
	J.P.S..	10-1-10		

DRAFT

REACTION BEARING AREAS FOR HORIZONTAL WATER PIPE BENDS

BASED ON TEST PRESSURE OF 200 P.S.I.

ALL AREAS GIVEN IN SQUARE FEET.

SIZE AND DEGREE OF BEND	STATIC THRUST IN POUNDS	MODERATELY DRY CLAY 4000 LBS/FT^2	SOFT CLAY 2000 LBS/FT^2	GRAVEL/COARSE SAND 1600LBS/FT	8000 LBS/FT DRY CLAY - ALWAYS DRY^2	SAND, COMPACT FIRM 8000 LBS/FT^2	SAND -CLEAN DRY 4000 LBS/FT^2	SOIL 1000 LBS/FT^2 QUICKSAND - VERY POOR	ROCK - POOR 10,000 LBS/FT^2
24"									
11 1/4°	17,734	5	9	11	3	3	5	18	2
22 1/2°	35,305	9	18	22	5	5	9	36	4
45°	69,252	18	35	42	9	9	18	70	7
90°	127,936	32	64	77	16	16	32	128	13
PLUG	90,478	23	46	55	12	12	23	91	10
30"									
11 1/4°	27,709	7	14	17	4	4	7	2	3
22 1/2°	55,163	14	28	34	7	7	14	56	6
45°	108,206	28	55	65	14	14	28	109	11
90°	199,900	50	100	120	25	25	50	200	20
PLUG	141,372	36	71	85	18	18	36	142	15
36"									
11 1/4°	39,901	10	20	24	5	5	10	40	4
22 1/2°	79,439	20	40	48	10	10	20	30	8
45°	155,816	39	78	94	20	20	39	156	16
90°	287,855	72	144	172	36	36	72	288	29
PLUG	203,575	51	102	122	26	26	51	204	21
48"									
11 1/4°	70,935	18	36	43	9	9	18	71	8
22 1/2°	141,218	36	71	85	18	18	36	142	15
45°	277,007	70	139	166	35	35	70	277	28
90°	511,742	128	256	320	64	64	128	512	52
PLUG	361,911	91	181	217	46	46	91	362	37

DRAFT

REACTION BEARING AREAS ARE IN SQUARE FEET MEASURED IN A VERTICAL PLANE IN THE TRENCH SIDE AT AN ANGLE OF 90° TO THE THRUST VECTOR.

USE 6" - 90° BEND VALUE FOR HYDRANTS FOR ADDITIONAL SAFETY FACTOR.

CITY OF RALEIGH

DEPARTMENT OF PUBLIC UTILITIES

THRUST BLOCKING DESIGN QUANTITY TABLE

DWG. NO.	REVISIONS	DATE	REVISIONS	DATE
R-8	D.W.C.	6-23-99		
	J.P.S.	10-1-10		

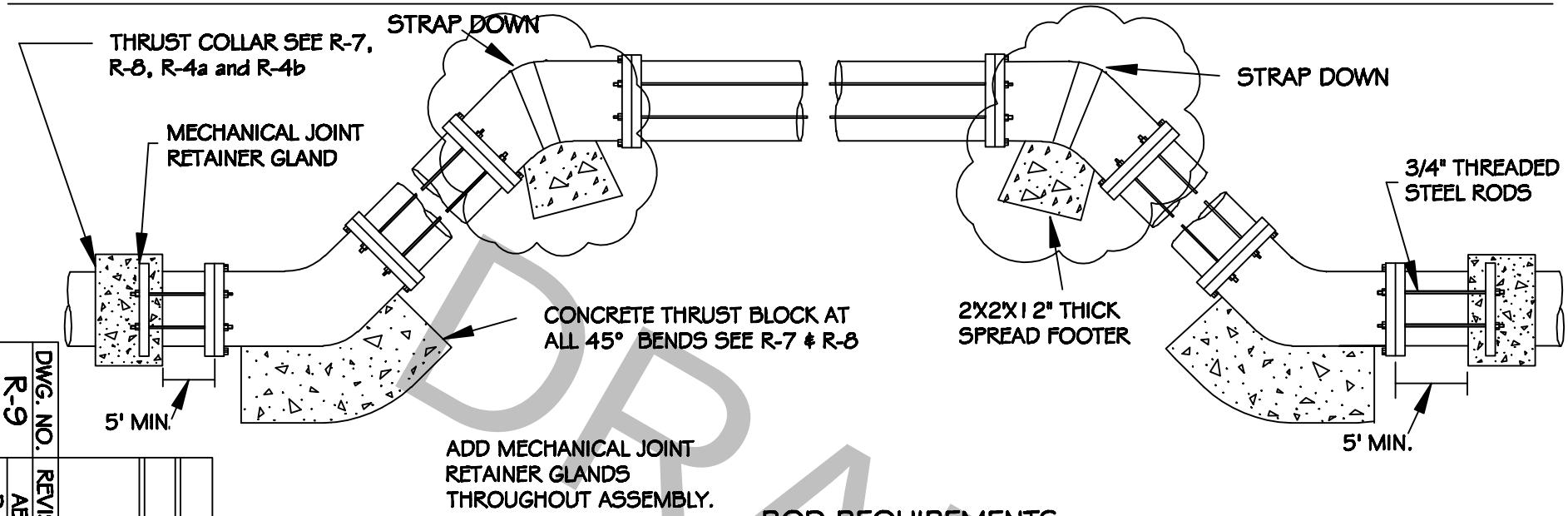

DRAFT

ROD REQUIREMENTS

SIZE OF 45 BEND	STATIC THRUST IN POUNDS	NO. OF RODS REQUIRED
6"	4,328	2
8"	7,694	4
12"	17,312	4
16"	30,779	8
24"	69,252	8

** Revised position of thrust blocks

GENERAL NOTES:

1. STEEL RODS AND BOLTS SHALL BE 3/4" HOT DIPPED GALVANIZED.
2. CONCRETE SHALL NOT CONTACT BOLTS OR ENDS OF MECHANICAL JOINT BENDS.
3. RESTRAINED MECHANICAL GLANDS TO BE USED AT ALL FITTINGS.
4. MUST USE DUCTILE IRON EYE BOLTS WHERE NECESSARY.
5. ALL PIPING IN VERTICAL BENDS MUST BE DUCTILE IRON.
6. PIPE SHALL BE DUCTILE IRON A MINIMUM OF ONE JOINT IN EACH DIRECTION.

CITY OF RALEIGH
DEPARTMENT OF PUBLIC UTILITIES

STANDARD VERTICAL BEND

DWG. NO.	REVISIONS	DATE	REVISIONS	DATE
R-9	ABB D.H.L.	4-6-04 6-18-08	J.P.S.	10-1-10

REUSE WATER

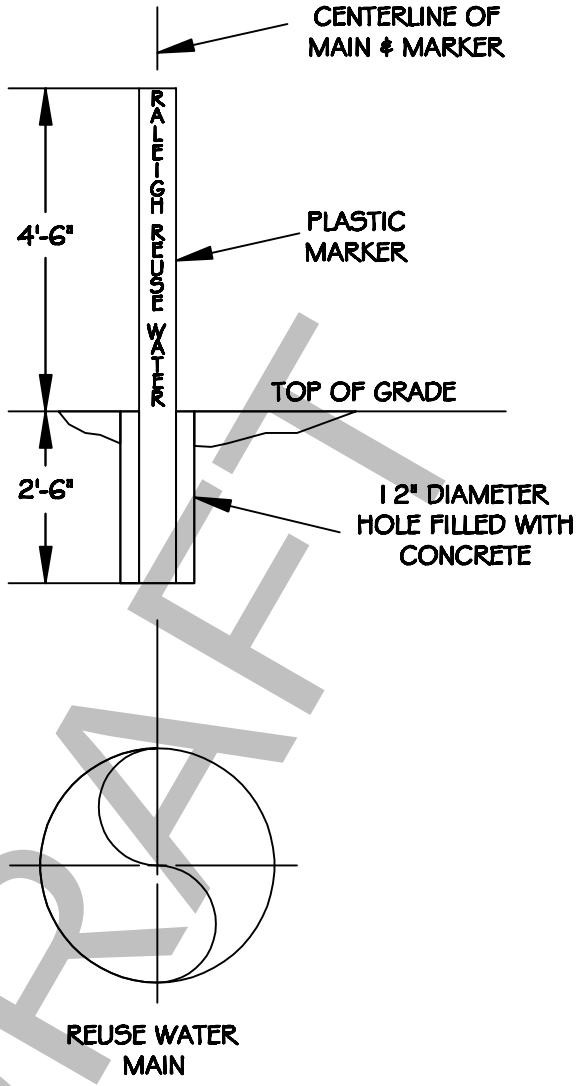

DRAFT

NOTES
1. REUSE WATER MARKER TO BE PURPLE IN COLOR.
2. REUSE WATER MARKER TO BE LABELED "RALEIGH REUSE WATER".
3. TO BE SPACED ALONG CENTERLINE OF MAIN EVERY 300 FEET.
4. MARKERS TO BE ROUND AND 4" IN DIAMETER.

** Minor Text Editing

CITY OF RALEIGH

DEPARTMENT OF PUBLIC UTILITIES

STANDARD MAIN & VALVE MARKERS FOR REUSE WATER IN EASEMENTS

DWG. NO.	REVISIONS	DATE	REVISIONS	DATE
R-10	D.W.C.	9-7-99	DHL	8-16-07
	RRH	3-31-00	J.P.S.	10-19-10

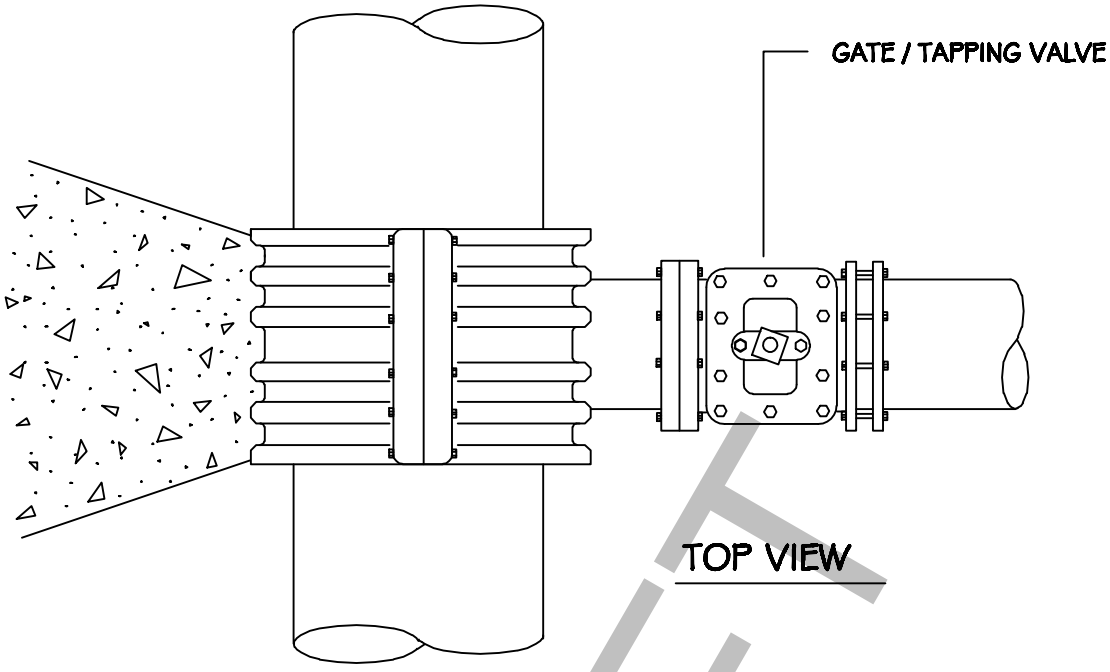

TOP VIEW

3000 PSI SOLID CONCRETE SHALL BE USED AS FOOTING FOR DUCTILE IRON PIPE.

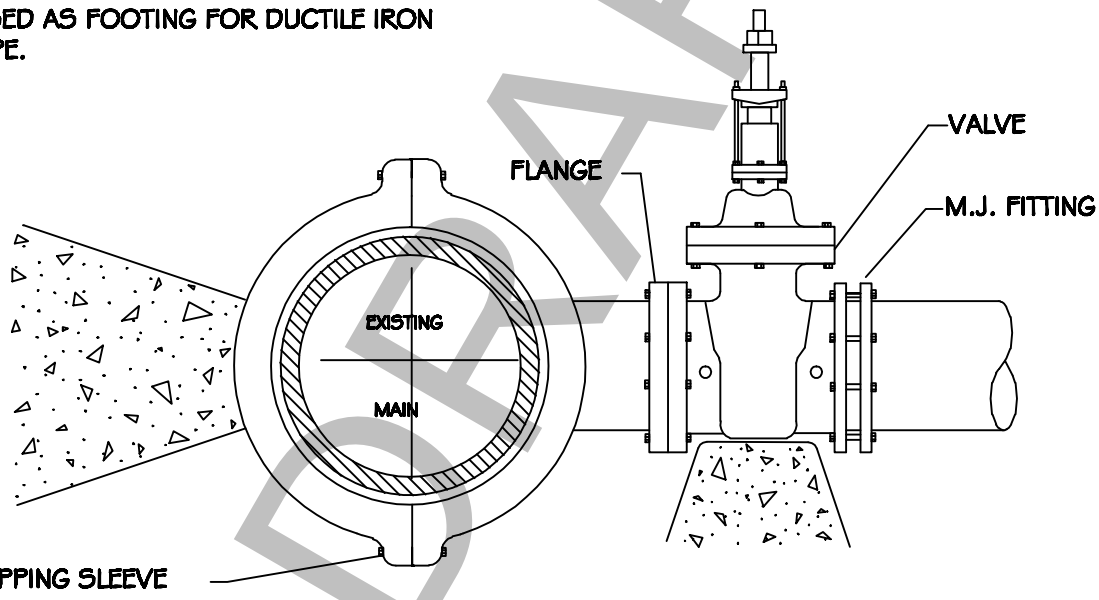

SIDE VIEW

DRAFT

NOTES:
1. CONCRETE SHALL NOT CONTACT BOLTS OR ENDS OF MECHANICAL JOINT FITTINGS.
2. SEE STANDARD REACTION BLOCK TABLES, R-7 AND R-8 FOR AREA OF CONCRETE REQUIRED.

CITY OF RALEIGH
DEPARTMENT OF PUBLIC UTILITIES

4" - 24" STANDARD TAPPING SLEEVE AND VALVE ASSEMBLY

DWG. NO.	REVISIONS	DATE	REVISIONS	DATE
R-11	Y.C.A.	12-31-91	RRH	3-31-00
	D.W.C.	9-7-99	J.P.S.	10-19-10

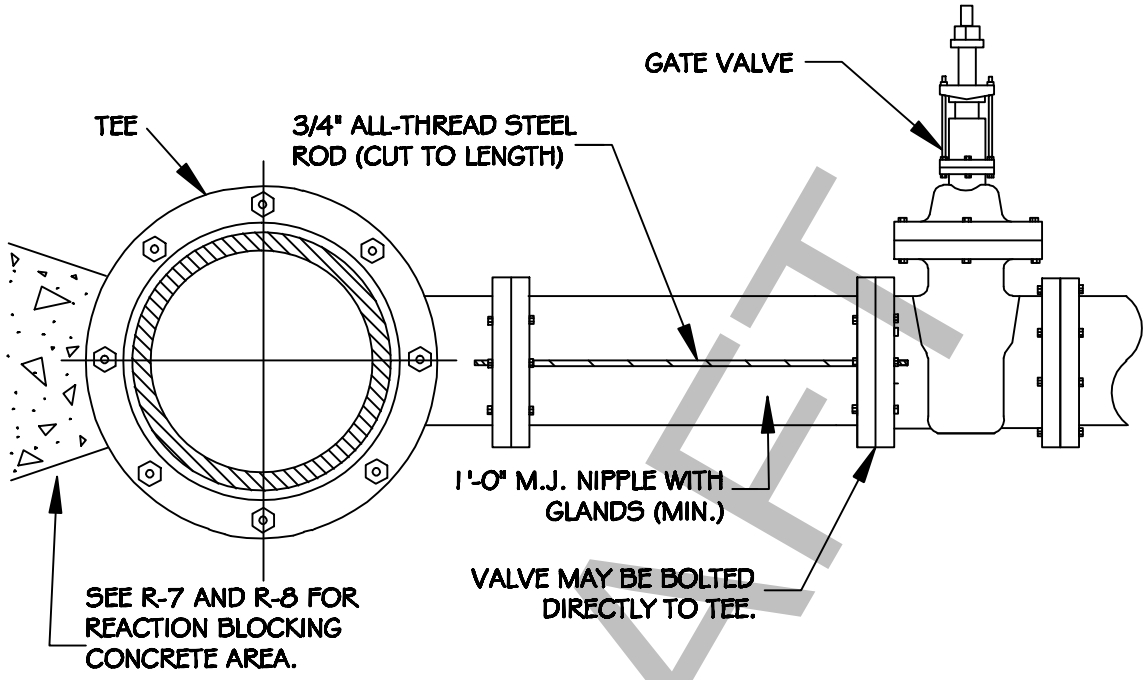

DRAFT

ROD REQUIREMENTS	
NO. OF RODS	BRANCH SIZE
4"	2
6"	2
8"	4
12"	4
16"	6
24"	6
30"	8
36"	8

NOTES:
1. STEEL RODS AND BOLTS SHALL BE 3/4" HOT DIPPED GALVANIZED.
2. SEE STANDARD THRUST BLOCK. TABLES R-7 AND R-8 FOR CONCRETE.
3. CONCRETE SHALL NOT CONTACT BOLTS OR ENDS OF MECHANICAL FITTINGS.

** Minor Text Edits

CITY OF RALEIGH

DEPARTMENT OF PUBLIC UTILITIES

VALVE RESTRAINT AT TEES AND CROSSES FOR LINES (4"-24")

DWG. NO.	REVISIONS	DATE	REVISIONS	DATE
R-12	RRH	3-31-00	D.H.L.	6-16-08
	A.B.B.	4-19-04	J.P.S.	10-19-10

VALVE SIZE	"X"
16"	5' M.H.
24"	6' M.H.
30" OR GREATER	8' M.H.

NOTES:

1. USE STANDARD PRECAST ECCENTRIC TOP.
2. BASE SECTION SHALL BE OF "DOG HOUSE" TYPE TO FIT OVER MAIN.
3. PROVIDE A MIN. OF 12" OF #67 STONE FOR POSITIVE DRAINAGE IN BOTTOM OF MANHOLE.
4. GROUT RISER/BASE SECTION AS NECESSARY.
5. MANHOLE LID SHALL SAY "WATER".
6. FLAT TOP MAY BE USED IN NON-PAVED AREAS WHEN NECESSARY TO MATCH GRADE.

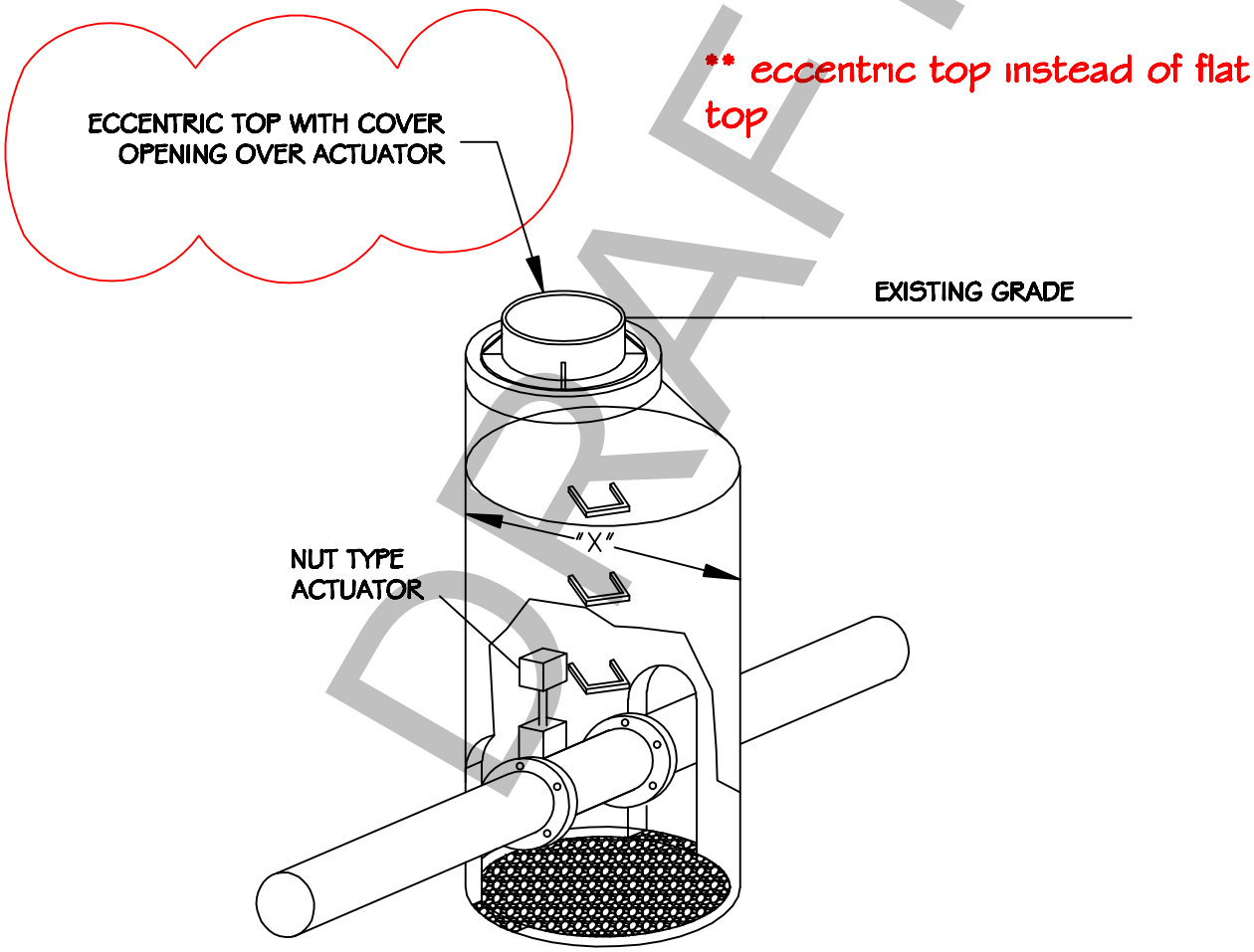

DRAFT

CITY OF RALEIGH

DEPARTMENT OF PUBLIC UTILITIES

BUTTERFLY VALVE MANHOLE DETAIL FOR 16" & LARGER MAINS

DWG. NO.	REVISIONS	DATE	REVISIONS	DATE
R-13	RRH	3-31-00	D.H.L.	6-18-08
	ABB	3-14-05	J.P.S.	10-20-10

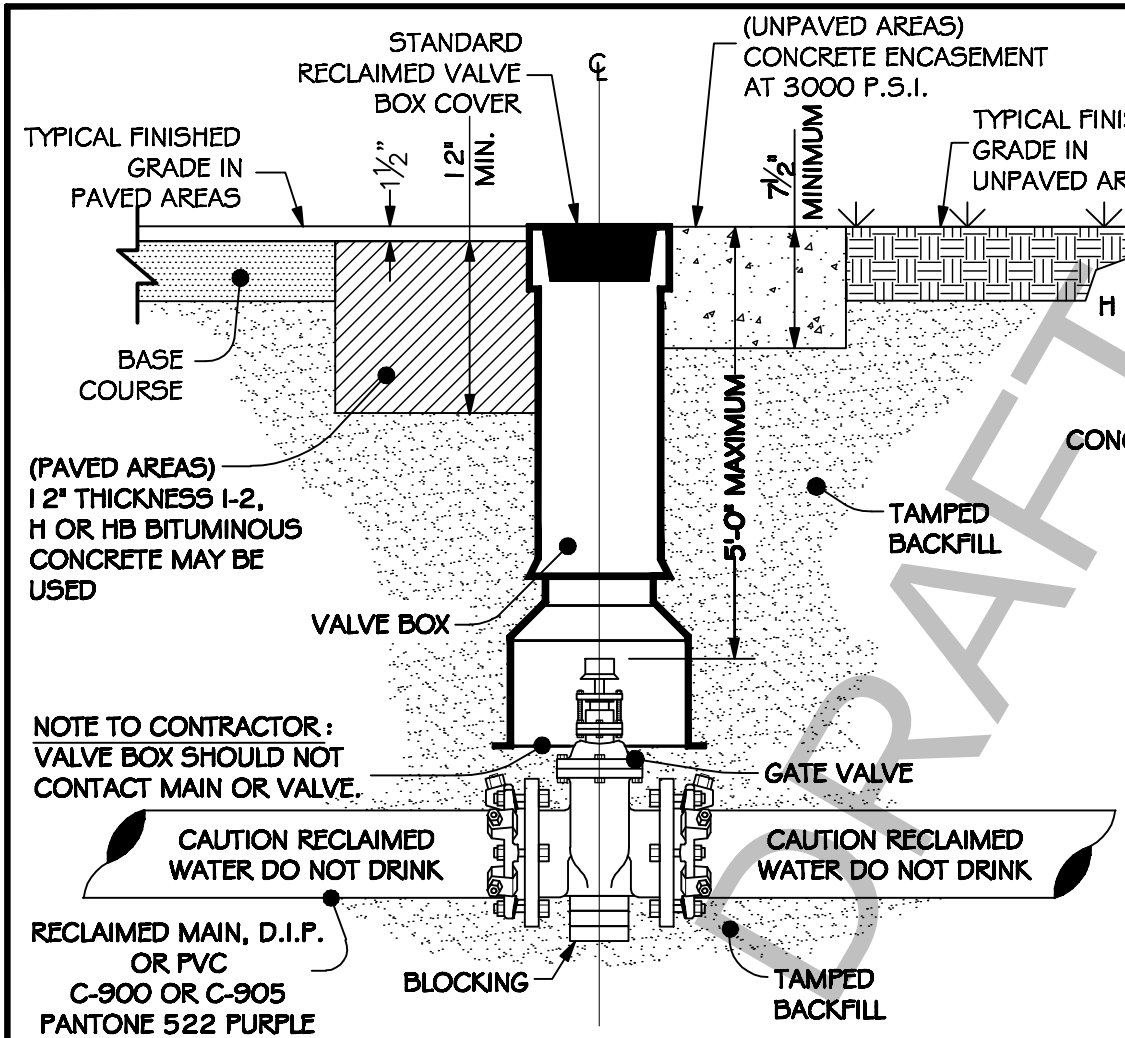

SECTION VIEW

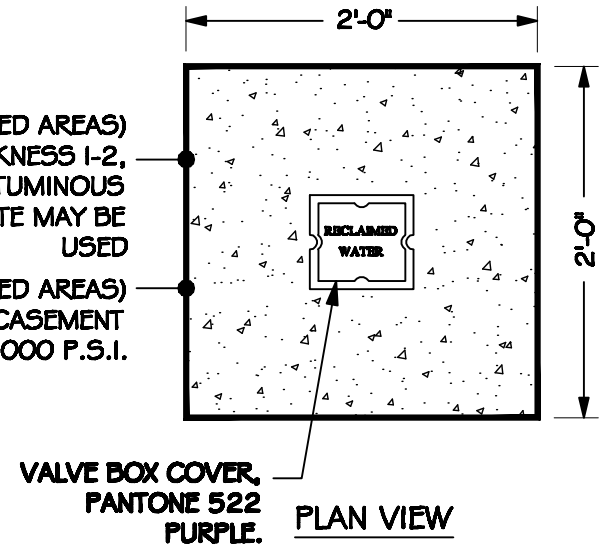

PLAN VIEW

NOTES:

1. ONLY MANUFACTURED VALVE BOX EXTENSIONS SHALL BE ALLOWED.
2. VALVE OPERATING NUT MUST BE EXTENDED SO THATTHE DEPTH IS NO GREATER THAN 5' (ft.) FROM THE SURFACE USING A MANUFACTURER APPROVED EXTENSION KIT.
3. PRECAST CONCRETE ENCASEMENT IS ALLOWED OUTSIDE OF PAVED AREAS.

** New detail for valve installation

CITY OF RALEIGH

DEPARTMENT OF PUBLIC UTILITIES

RECLAIMED WATER VALVE AND BOX INSTALLATION

DWG. NO.	REVISIONS:	DATE:	REVISIONS:	DATE:
R-14	DHL	10/11/07		

DRAFT

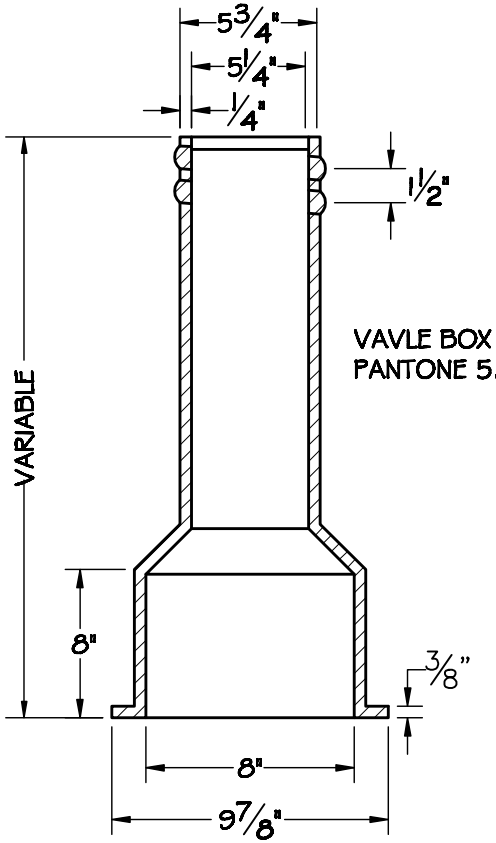

BOTTOM SECTION

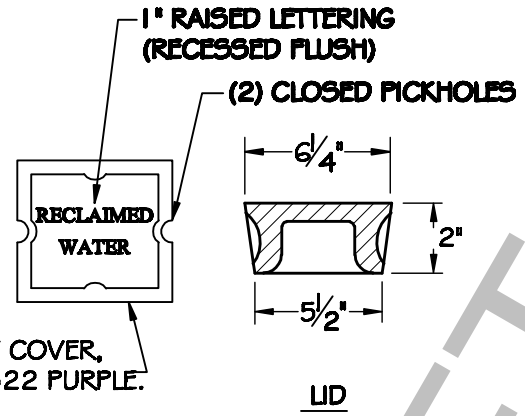

LID

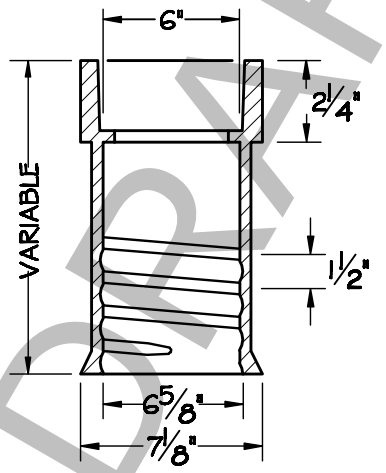

SQUARE UPPER SECTION

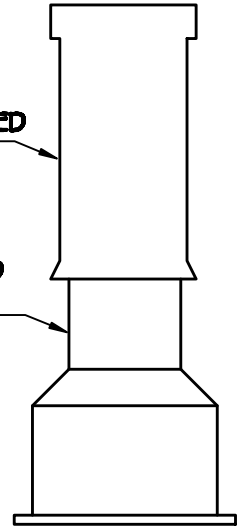

COMPLETE BOX

NOTES:

1) VALVE BOX COVER SHALL WEIGH A MINIMUM 13 lbs.
2) ENTIRE VALVE BOX ASSEMBLY & COVER SHALL BE CAST FROM CLASS 35 GRAY IRON.
3) ASSEMBLY SHALL BE DOMESTICALLY MADE AND MANUFACTURED IN THE U.S.A.
4) ASSEMBLY OTHER THAN COVER SHALL BE PAINTED BLACK.

DRAFT

** New detail for valve boxes

CITY OF RALEIGH

DEPARTMENT OF PUBLIC UTILITIES

STANDARD VALVE BOX
(FOR RECLAIMED WATER)

DWG. NO.	REVISIONS:	DATE:	REVISIONS:	DATE:
R-15	DHL	10/11/07		
	J.P.S.	10/22/11		

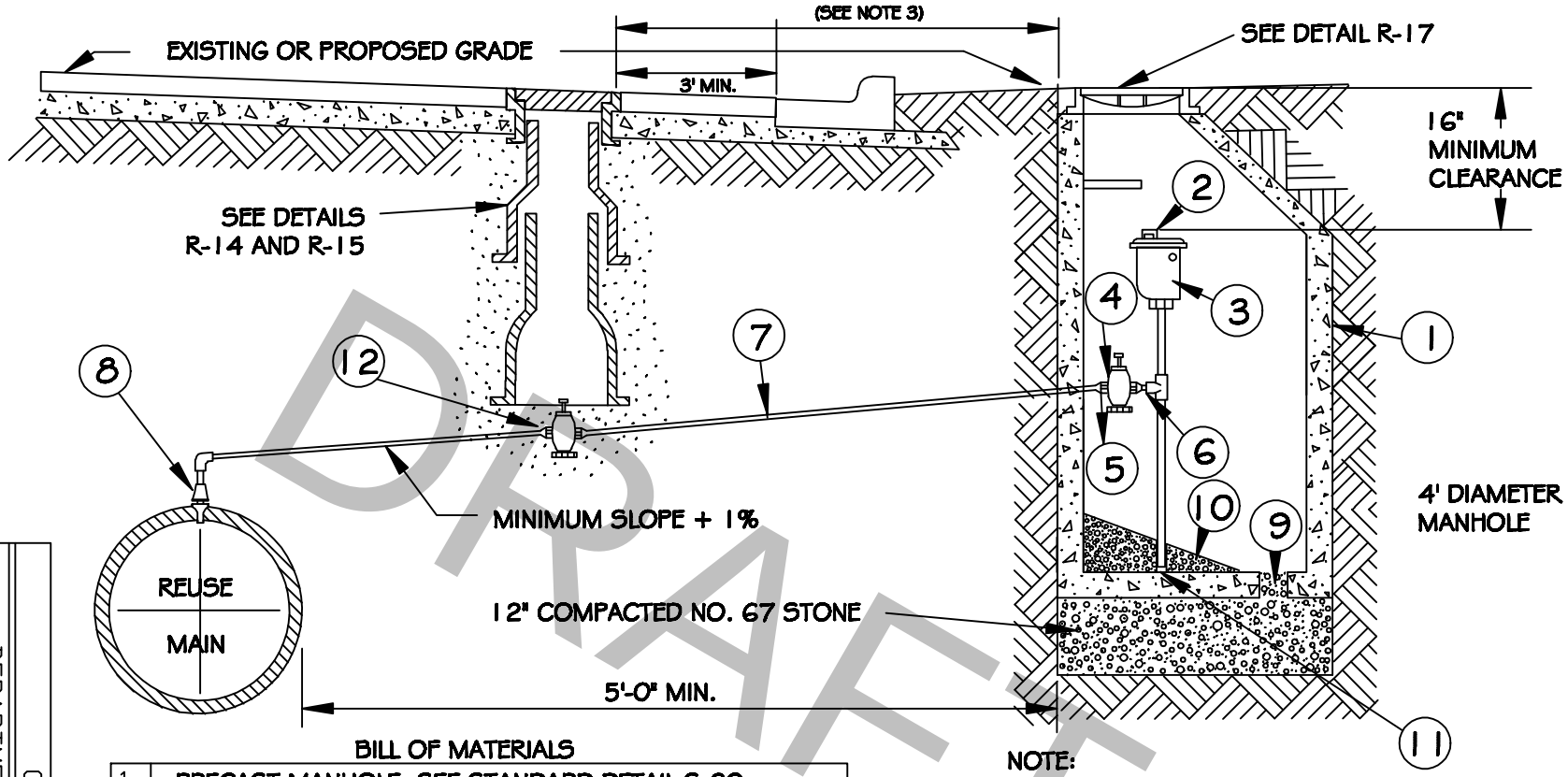

DRAFT

BILL OF MATERIALS

1	PRECAST MANHOLE, SEE STANDARD DETAIL S-20
2	TRASH HOOD
3	2" AIR RELEASE VALVE
4	2" CURB STOP BALL VALVE
5	ADAPTER
6	2" MECHANICAL JOINT BRASS PIPE AND FITTINGS
7	2" TYPE "K", SOFT COPPER WITH FLARED ELBOW
8	CORPORATION COCK
9	6" DIAMETER DRAIN
10	GROUT, 1/8" TO 1'-0" MIN. SLOPE TO DRAIN
11	PIPE CAP
12	2"-GATE VALVE

SEE STANDARD DETAIL R-3 AND R-3A TO INSURE PROPER BACKFILL.

NOTE:
1. AIR VALVE TO BE P-20 WITH VACUUM CHECK BY CRISPIN OR VAL MATIC VM 45.
2. THE AIR RELEASE MANHOLE SHALL BE INSTALLED IN THE SHOULDER OR AS DIRECTED BY THE ENGINEER.
3. FOR MAINS LOCATED OUTSIDE OF STREET RIGHT-OF-WAYS THE MAXIMUM DISTANCE BETWEEN THE MANHOLE AND THE VALVE BOX SHOULD BE THREE (3) FEET.
4. MAIN SHALL BE DEEP ENOUGH TO ACCOMODATE INSTALLATION AS SHOWN

CITY OF RALEIGH
DEPARTMENT OF PUBLIC UTILITIES

STANDARD REUSE AIR RELEASE VALVE

DWG. NO.	REVISIONS	DATE	REVISIONS	DATE
R-16	ABB	10-4-04	RRH	6-7-00
			J.P.S.	10-20-10

MANHOLE FRAME AND COVER
COVER 120 LBS. MINIMUM

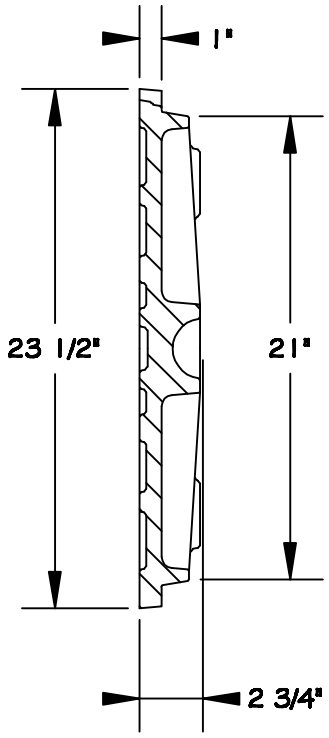

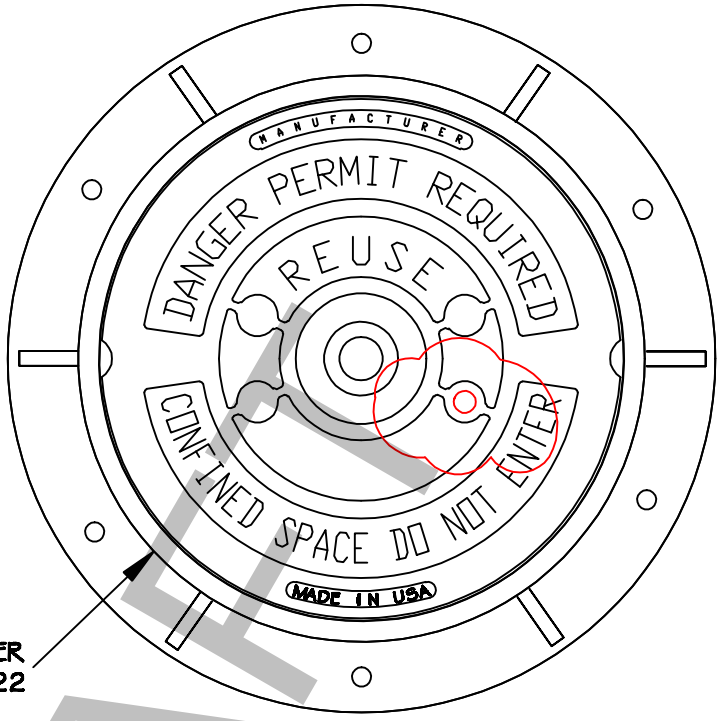

PAINT COVER
PANTONE 522

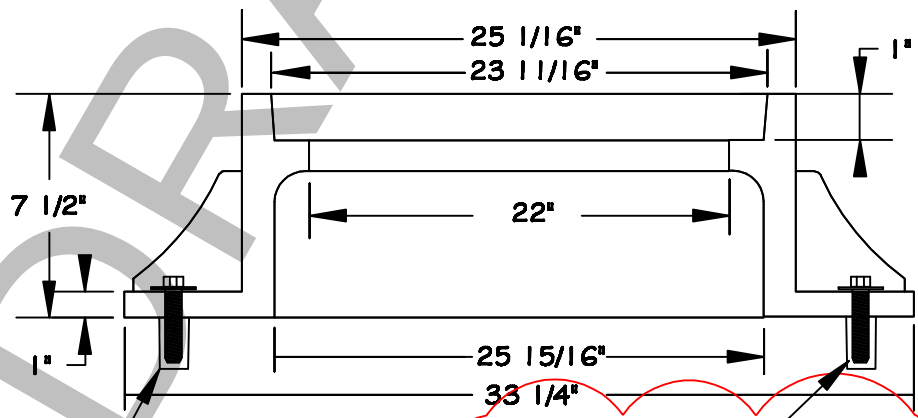

** Text Edits

LAGSHIELDS MAY ONLY BE USED IN ROADWAY APPLICATIONS.

5/8"X3" LAGSHIELD IN HOLE DRILLED INTO CONE OR RING WITH ANCHOR SUNK TO DESIGN DEPTH, AND 3/8"X3" HOT DIPPED GALVANIZED LAG BOLT AND WASHER.

NOTES:

1) ALL MANHOLE FRAMES SHALL BE BE DOMESTICALLY CAST
2) FRAME SHALL BE A MINIMUM WEIGHT OF 182 LBS.
3) COVER SHALL WEIGH A MIN. OF 120 LBS.
4) MANHOLES WITHIN PAVED SURFACES SHALL BE CONSTRUCTED IN ACCORDANCE WITH S-29.

CITY OF RALEIGH

DEPARTMENT OF PUBLIC UTILITIES

STANDARD MANHOLE COVER

DWG. NO.	REVISIONS	DATE	REVISIONS	DATE
R-17	A.B.B.	4-8-04	J.P.S.	10-20-10
	D.H.L.	6-18-08		

DRAFT

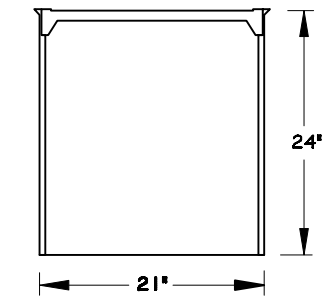

SIDE VIEW

LID TOP VIEW

STANDARD HEAVY DUTY METER BOX

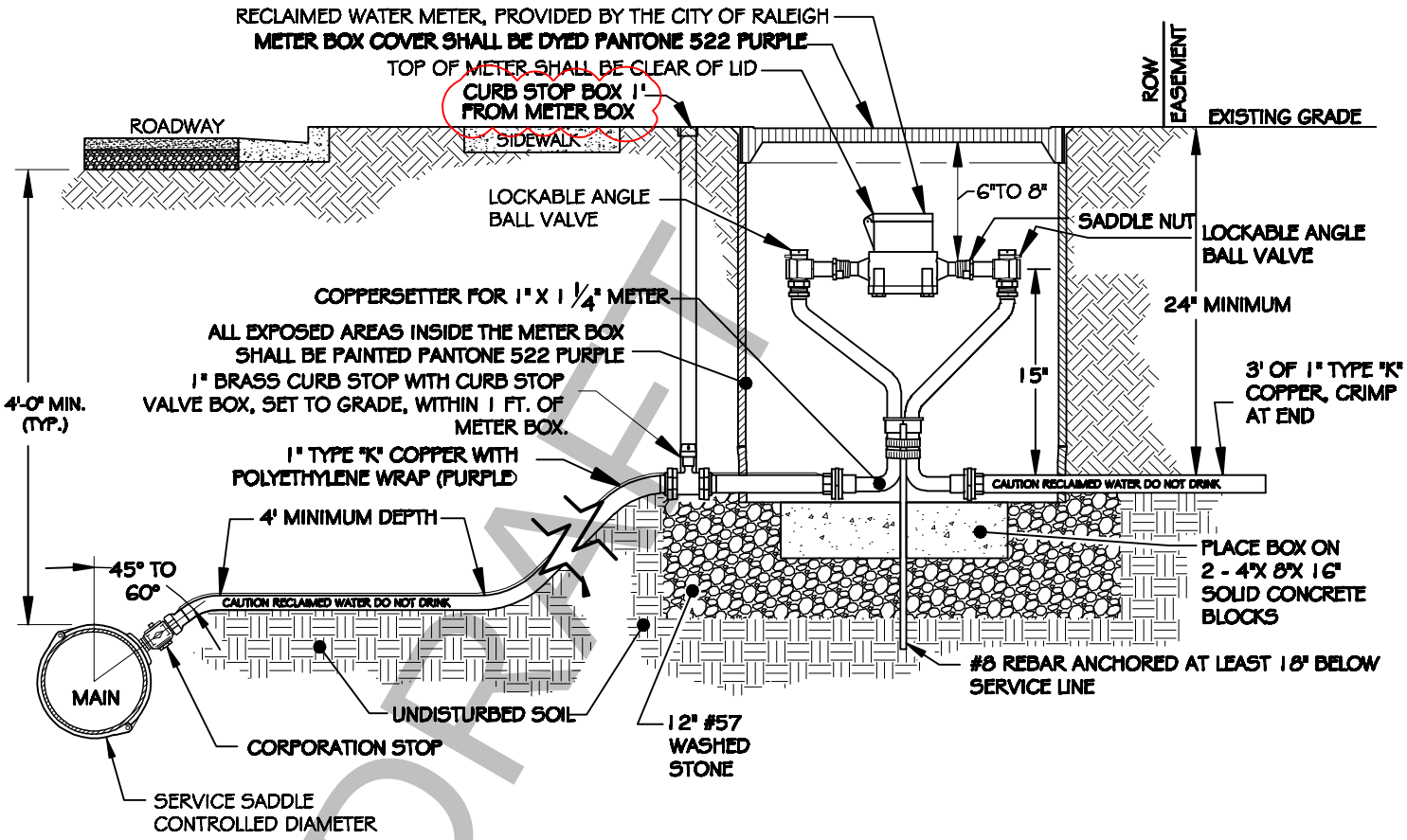

DRAFT

NOTES:

1) RECLAIMED WATER METER SHALL NOT BE LOCATED IN AREAS SUBJECT TO VEHICULAR TRAFFIC.
2) ALL METER BOXES SHALL BE AS MANUFACTURED WITH HEAVY DUTY RATED LOCKING POLYMER CEMENT COVER AS APPROVED BY CORPUD.
3) METER & SETTER SHALL BE INSTALLED AND ANCHORED IN CENTER OF BOX.
4) THE INTERIOR OF THE BOX SHALL BE STENCILED WITH THE WORDS. CAUTION RECLAIMED WATER - DO NOT DRINK .
5) ALL RELOCATIONS OF EXISTING OR PERMITTED RECLAIMED WATER INFRASTRUCTURE INCLUDING SERVICE PIPING AND METER BOXES SHALL BE PERMITTED AND INSPECTED.
6) CURB STOP BOX SHALL HAVE PLUG STYLE LID WITH PENTAGON BOLT 1-1/4" STEEL UPPER SECTION, AND ARCH STYLE BASE. STEEL STATIONARY ROD TO BE PROVIDED FOR CURB STOP OPERATION.
7) 1" BRASS CURB STOP WITH CURB STOP VALVE BOX SET TO GRADE, WITHIN 1' OF METER BOX.

** ADDED CURB STOP AND NOTE #5 AND #6

CITY OF RALEIGH

DEPARTMENT OF PUBLIC UTILITIES

STANDARD 1" RECLAIMED WATER SERVICE & METER BOX INSTALLATION

DWG. NO.	REVISIONS:	DATE:	REVISIONS:	DATE:
R-18	DHL	6/18/08		
	J.P.S.	10-20-10		