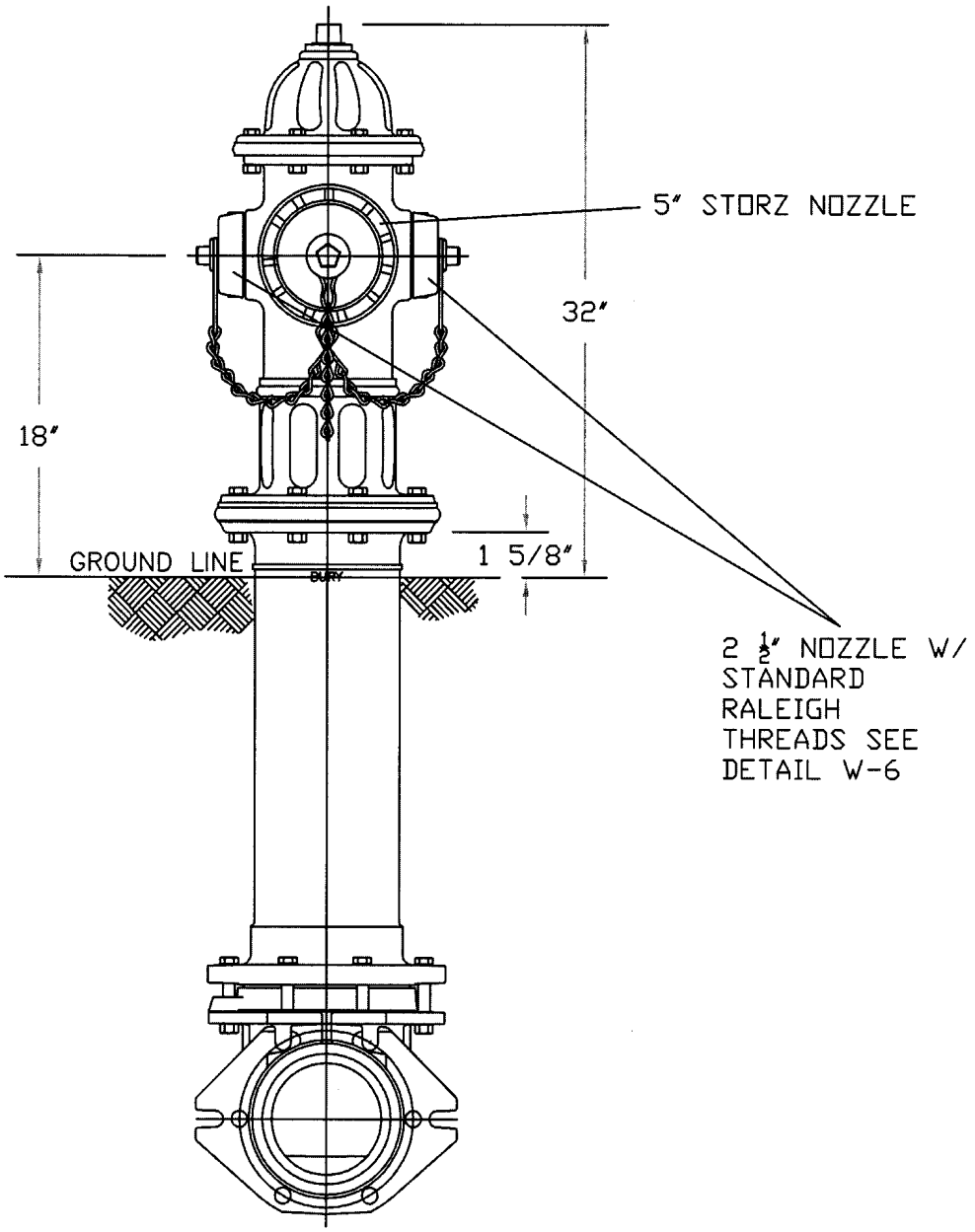


| CITY OF RALEIGH | | | | |
|---|---|---|---|---|
| DEPARTMENT OF PUBLIC UTILITIES | | | | |
| STANDARD FIRE HYDRANT WITH 5″ STORZ PUMPER NOZZLE | | | | |
| DWG. NO. | REVISIONS | DATE | REVISIONS | DATE |
| W-5 | | 3-1-87 | ABB | 7-21-05 |
| | RRH | 3-31-00 | | |