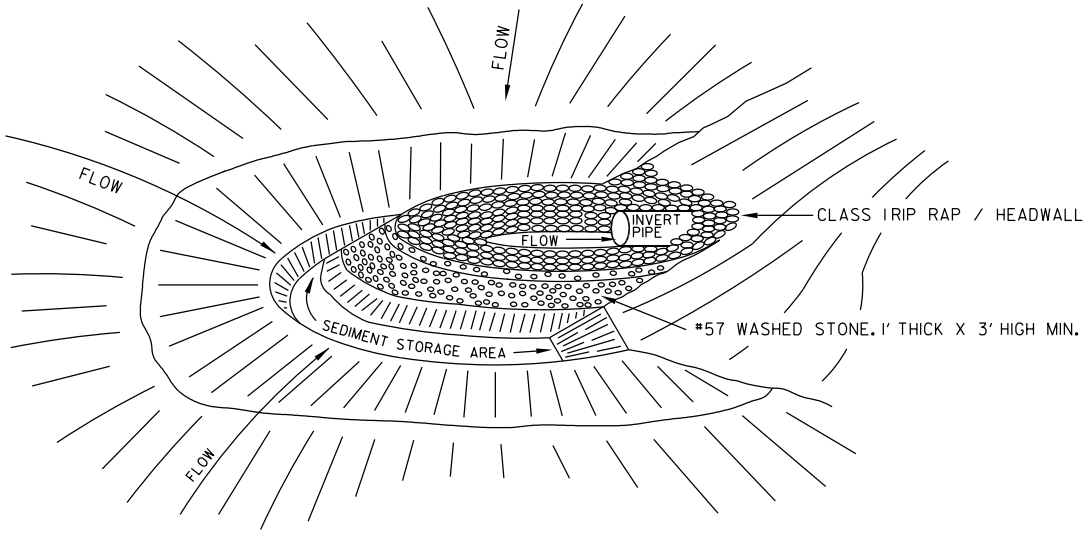

MAINTENANCE:
REMOVE SEDIMENT & RESTORE THE SEDIMENT STORAGE AREA TO ITS ORIGINAL DIMENSION WHEN SEDIMENT HAS ACCUMULATED TO 1/2 DESIGN DEPTH OF THE TRAP.

PLAN VIEW
NO SCALE

NOTE:
IF EXCAVATED STORAGE AREA IS USED AS TEMPORARY SEDIMENT TRAP, THE DESIGN CRITERIA FOR TEMPORARY SEDIMENT TRAP MUST BE SATISFIED.

ANY RIP-RAP DISPLACED FROM THE STONE HORSESHOE MUST BE REPLACED IMMEDIATELY.

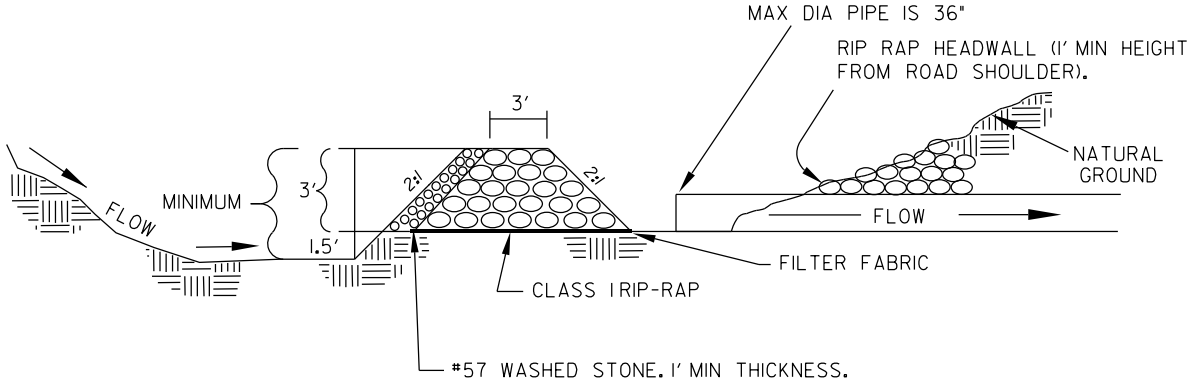

CROSS SECTION
NO SCALE

CITY OF RALEIGH
PUBLIC WORKS DEPARTMENT

REVISIONS	
WDP 8/31/04	
WDP 3/06/07	
WDP 1/9/2012	
WDP 10/9/2012	

DATE: 7/3/00 DRAWN BY: JTB

ROCK PIPE INLET PROTECTION

STD. # 40.13