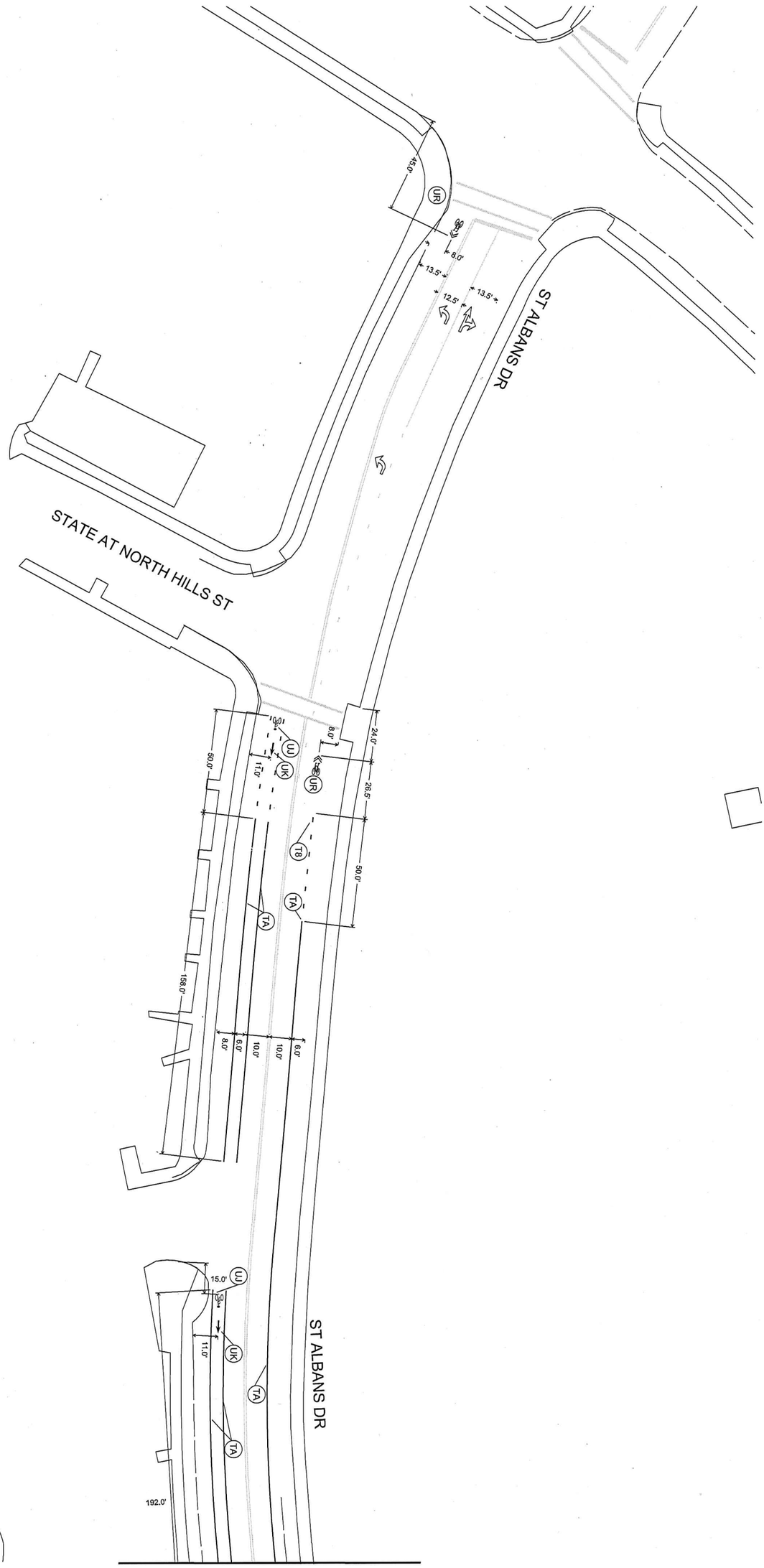

MATCH SHEET St Albans-2

09/10/2014

NORTH CAROLINA PROFESSIONAL ENGINEER SEAL 027696 JOSEPH L. LEWIS

Engineering NC, PC.
Transportation
Land Development
Environmental Services
4000 WestChase Blvd, Suite 530
Raleigh, North Carolina 27607
919.829.0328 • FAX 919.829.0329
NC License No.: C-3705

DATE	SEPTEMBER 2014
CAD/D TECH	BRP
CHECKED BY	
REVISIONS	
NO.	DATE
SCALES	
HSCALE 1"=50'	
VSCALE	
PROJECT	
VHB 39139.00	
SHEET NO.	
St Albans-1	
DRAWING NO.	

Proposed Bicycle Facilities

Pavement Marking Plan

ST ALBANS DRIVE

Dartmouth Rd. to New Hope Church Rd.

CITY OF RALEIGH
PUBLIC WORKS DEPARTMENT

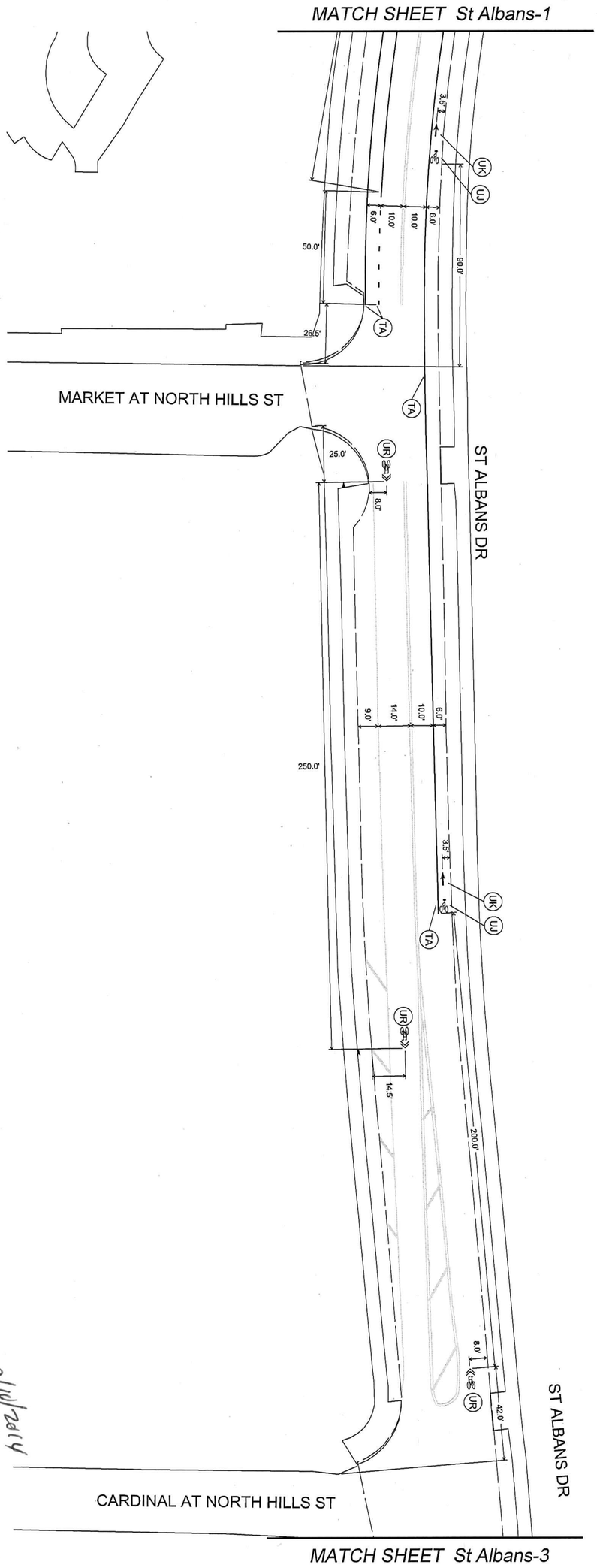

NORTH CAROLINA PROFESSIONAL SEAL 027696 ENGINEER JOSEPH L. LEWIS

09/10/2014

Engineering NC, P.C.
Transportation
Land Development
Environmental Services
4000 WestChase Blvd, Suite 530
Raleigh, North Carolina 27607
919.829.0328 • FAX 919.829.0329
NC License No.: C-3705

DATE	SEPTEMBER 2014
CADD TECH	BRP
CHECKED BY	JL
REVISIONS	
NO.	DATE
SCALES	
HSCALE 1"=50'	
VSCALE	
PROJECT	VHB 38139.00
SHEET NO.	St Albans-2
DRAWING NO.	

Proposed Bicycle Facilities
Pavement Marking Plan

ST ALBANS DRIVE
Dartmouth Rd. to New Hope Church Rd.

CITY OF RALEIGH
PUBLIC WORKS DEPARTMENT

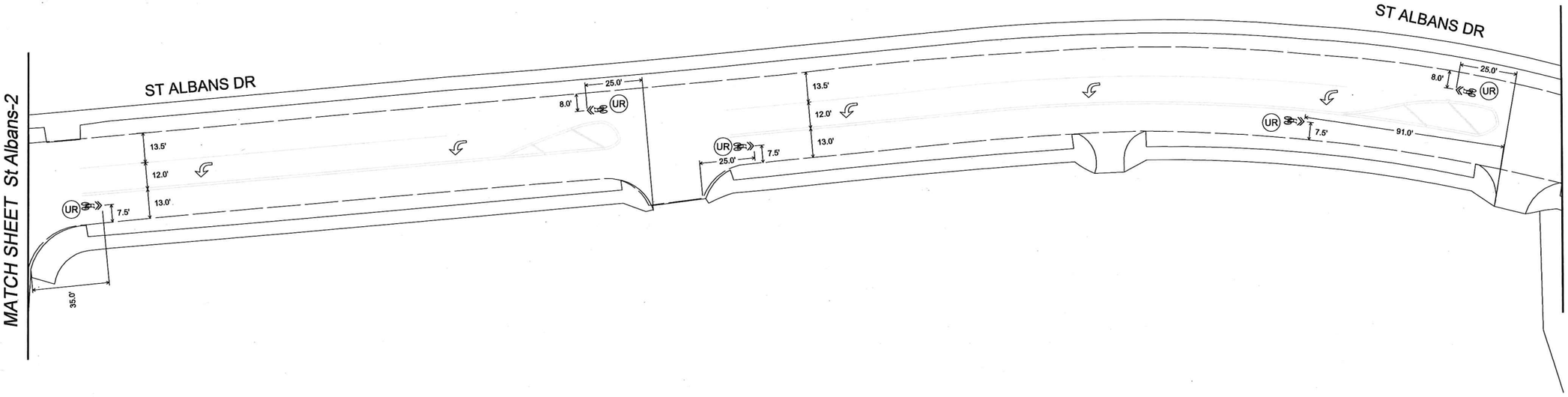

CITY OF RALEIGH
PUBLIC WORKS DEPARTMENT

ST ALBANS DRIVE
Dartmouth Rd. to New Hope Church Rd.

Proposed Bicycle Facilities
Pavement Marking Plan

09/10/2014
NORTH CAROLINA PROFESSIONAL SEAL 027696 ENGINEER JOSEPH L. LEWIS

VHB
Engineering NC, P.C.
Transportation
Land Development
Environmental Services
4000 WestChase Blvd, Suite 530
Raleigh, North Carolina 27607
919.829.0328 • FAX 919.829.0329
NC License No.: C-3705

DATE:	SEPTEMBER 2014
CADD TECH:	BRP
CHECKED BY:	JLL

REVISIONS

NO.	DATE

SCALES
HSCALE 1"=50'
VSCALE

PROJECT
VHB 38139.00

SHEET NO.
St Albans-3

DRAWING NO.

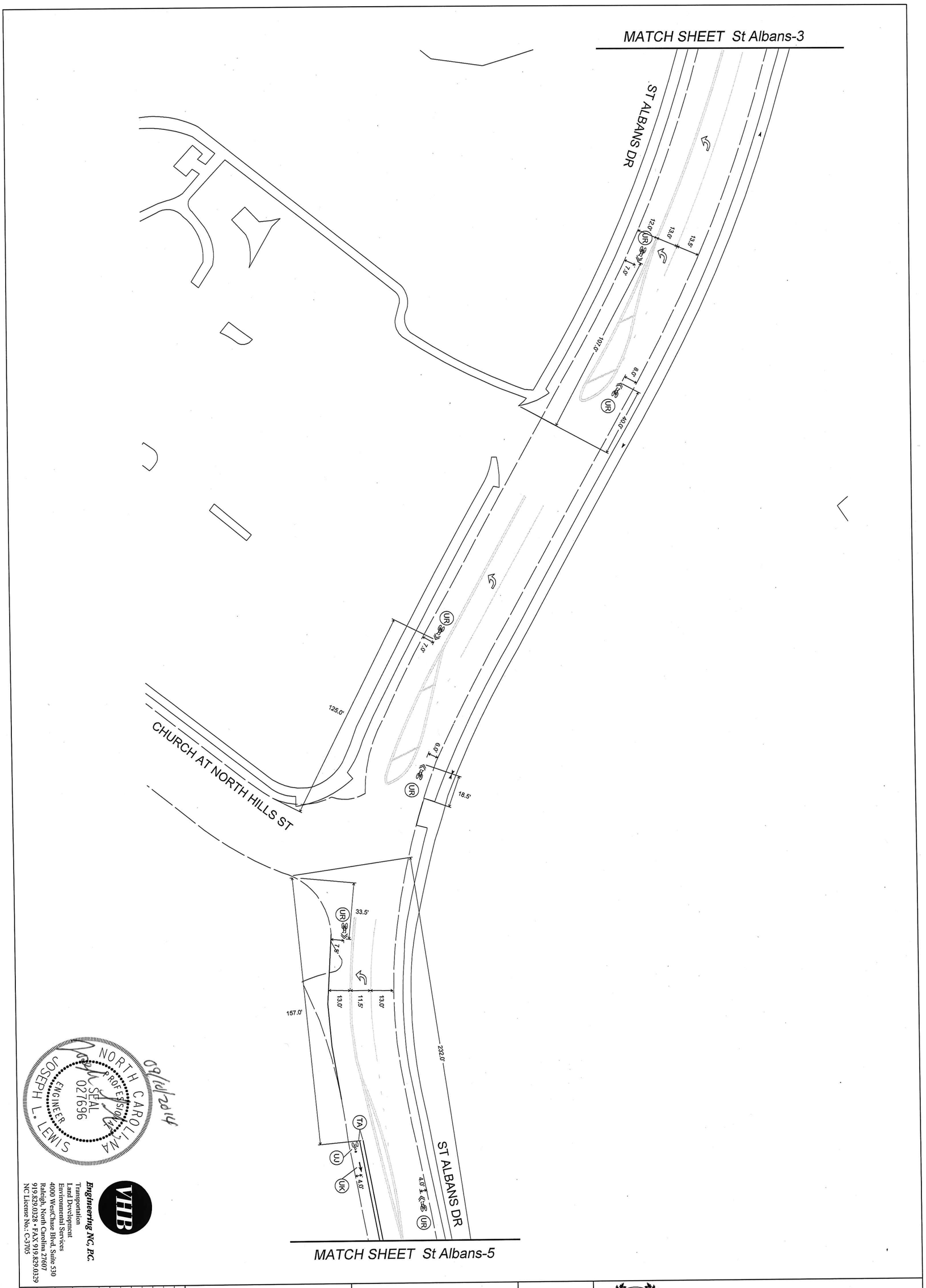
MATCH SHEET St Albans-3
ST ALBANS DR
CHURCH AT NORTH HILLS ST
ST ALBANS DR
MATCH SHEET St Albans-5
125.0'
157.0'
232.0'
107.0'
40.0'
18.5'
33.5'
13.0'
11.5'
13.0'
13.5'
12.0'
7.0'
8.0'
6.0'
4.0'
UR
TA
UJ
UK
NORTH CAROLINA
PROFESSIONAL
SEAL
027696
ENGINEER
JOSEPH L. LEWIS
09/10/2014
VHB
Engineering NC, P.C.
Transportation
Land Development
Environmental Services
4000 WestChase Blvd, Suite 530
Raleigh, North Carolina 27607
919.829.0328 • FAX 919.829.0329
NC License No.: C-3705
DATE: SEPTEMBER 2014
CADD TECH: BRP
CHECKED BY: JLL
REVISIONS
NO. DATE
SCALES
HSCALE 1"=50'
VSCALE
PROJECT
VHB 38139.00
SHEET NO.
St Albans-4
DRAWING NO.
Proposed Bicycle Facilities
Pavement Marking Plan
ST ALBANS DRIVE
Dartmouth Rd. to New Hope Church Rd.
CITY OF RALEIGH
PUBLIC WORKS DEPARTMENT

MATCH SHEET St Albans-4

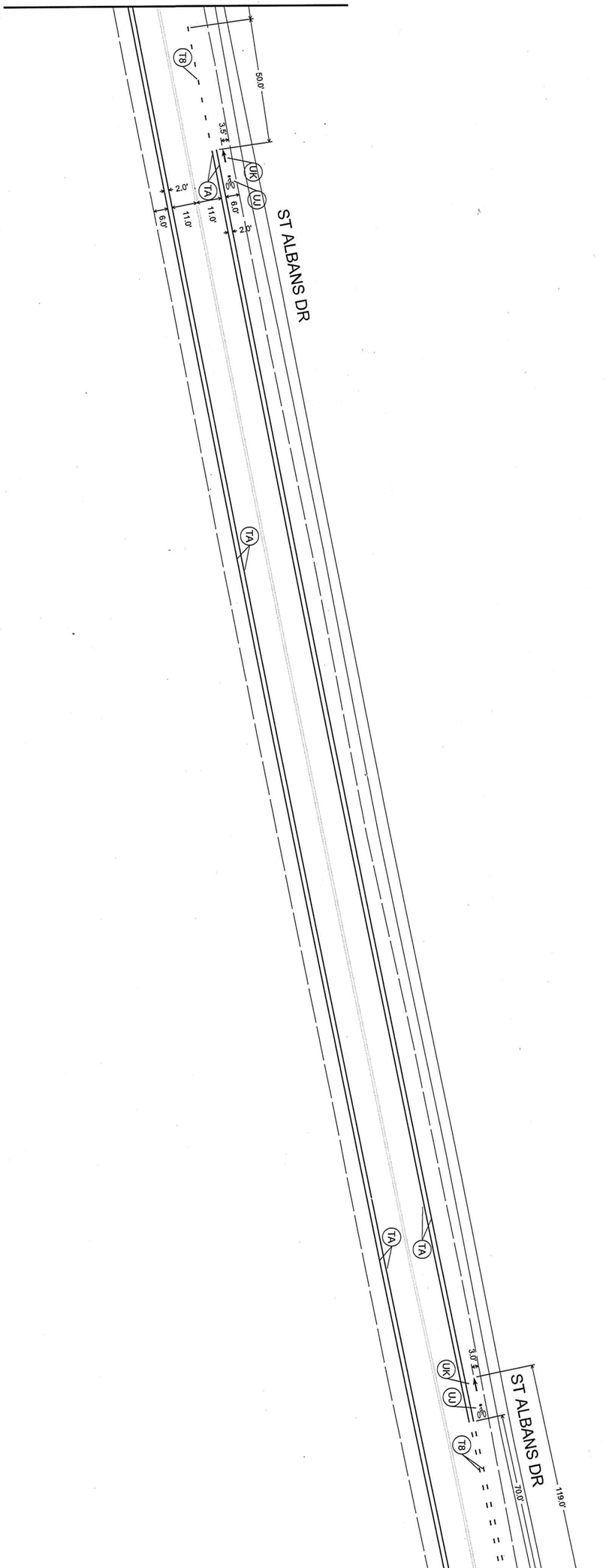

MATCH SHEET St Albans-6

NORTH CAROLINA PROFESSIONAL SEAL 027696 ENGINEER JOSEPH L. LEWIS

Engineering NC, PC.
Transportation
Land Development
Environmental Services
4000 WestChase Blvd, Suite 530
Raleigh, North Carolina 27607
919.829.0228 • FAX 919.829.0239
NC License No.: C-3705

DATE:	SEPTEMBER 2014
CADD TECH:	BBP
CHECKED BY:	
REVISIONS	
NO.	DATE
SCALES	
HSCALE 1"=50'	
VSCALE	
PROJECT	
VHB 36130.00	
SHEET NO.	
St Albans-5	
DRAWING NO.	

Proposed Bicycle Facilities
Pavement Marking Plan

ST ALBANS DRIVE
Dartmouth Rd. to New Hope Church Rd.

CITY OF RALEIGH
PUBLIC WORKS DEPARTMENT

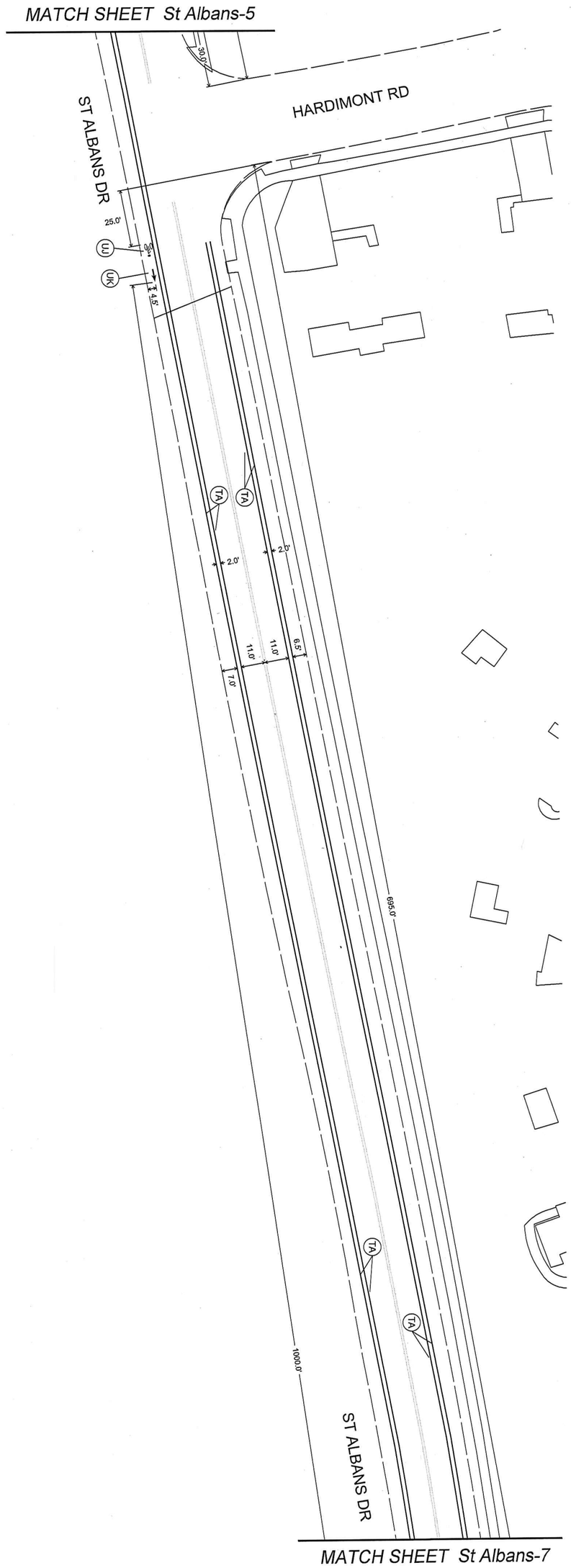

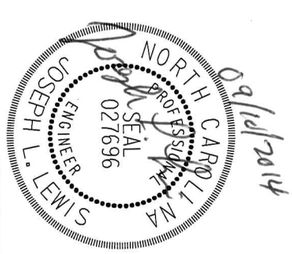

9/10/2014

Engineering NC, P.C.
Transportation
Land Development
Environmental Services
4000 WestChase Blvd, Suite 530
Raleigh, North Carolina 27607
919.829.0328 • FAX 919.829.0329
NC License No.: C-3705

DATE:	SEPTEMBER 2014
CADD TECH:	RBP
CHECKED BY:	JLL
REVISIONS	
NO.	DATE
SCALES	
HSCALE 1"=50'	
VSCALE	
PROJECT	
VHB 39150.00	
SHEET NO.	
St Albans-6	
DRAWING NO.	

Proposed Bicycle Facilities
Pavement Marking Plan

ST ALBANS DRIVE
Dartmouth Rd. to New Hope Church Rd.

CITY OF RALEIGH
PUBLIC WORKS DEPARTMENT

MATCH SHEET St Albans-6

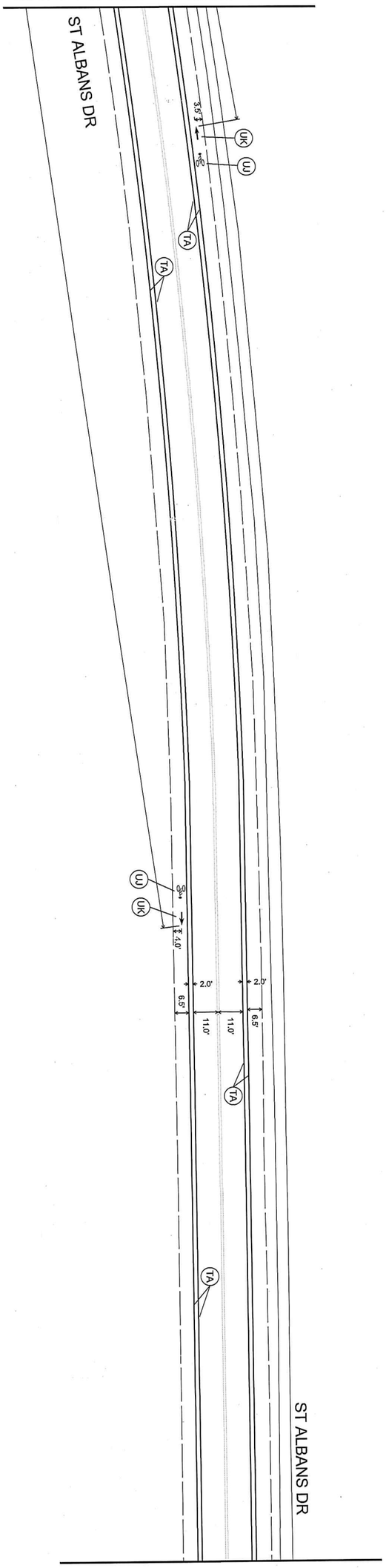

MATCH SHEET St Albans-8

09/10/2014

NORTH CAROLINA PROFESSIONAL ENGINEER SEAL 027696 JOSEPH L. LEWIS

Engineering NC, P.C.
Transportation
Land Development
Environmental Services
4000 WestChase Blvd. Suite 530
Raleigh, North Carolina 27607
919.829.0328 • FAX 919.829.0329
NC License No.: C-3705

DATE:	SEPTEMBER 2014
CADD TECH:	BSP
CHECKED BY:	AL
REVISIONS	
NO.	DATE
SCALES	
HSCALE 1"=50'	
VSCALE	
PROJECT	
VHB 39139.00	
SHEET NO.	
St Albans-7	
DRAWING NO.	

Proposed Bicycle Facilities
Pavement Marking Plan

ST ALBANS DRIVE
Dartmouth Rd. to New Hope Church Rd.

CITY OF RALEIGH
PUBLIC WORKS DEPARTMENT

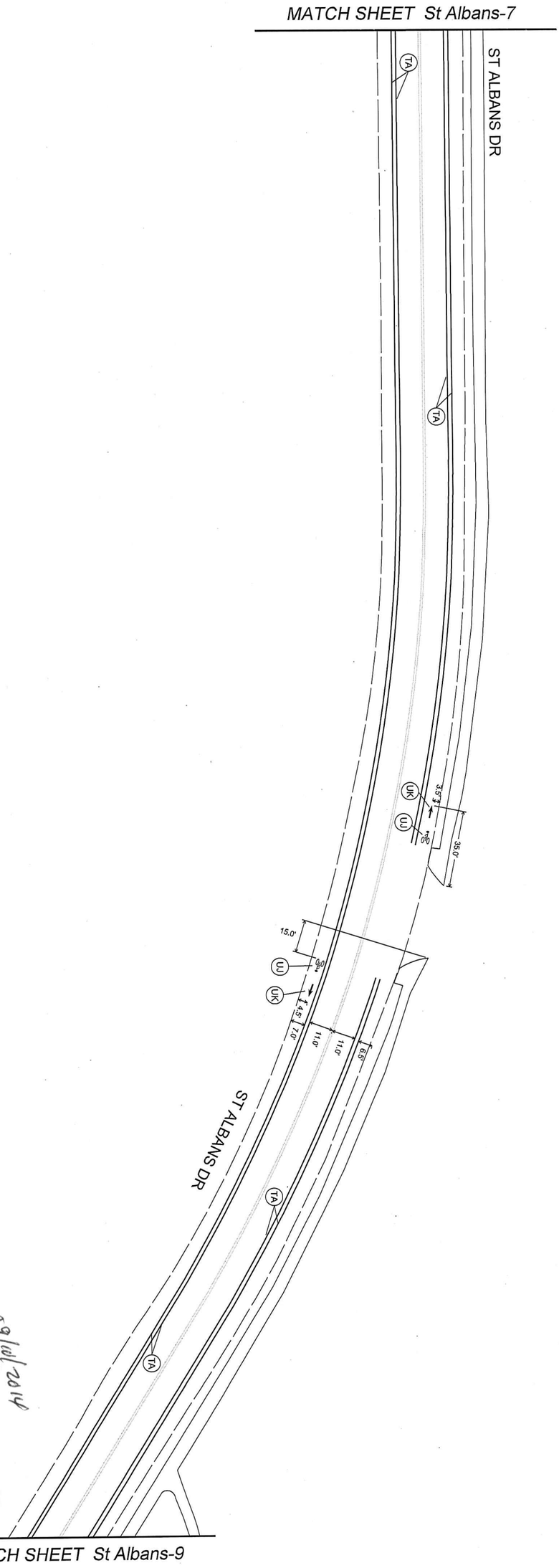

NORTH CAROLINA PROFESSIONAL SEAL 027696 ENGINEER JOSEPH L. LEWIS

09/10/2014

VHB

Engineering NC, P.C.
Transportation
Land Development
Environmental Services
4000 WestChase Blvd, Suite 530
Raleigh, North Carolina 27607
919.829.0328 • FAX 919.829.0329
NC License No.: C-3705

DATE:	SEPTEMBER 2014
CADD TECH:	BRP
CHECKED BY:	JLL
REVISIONS	
NO.	DATE
SCALES	
HSCALE 1"=50'	
VSCALE	
PROJECT	
VHB 38130.00	
SHEET NO.	
St Albans-8	
DRAWING NO.	

Proposed Bicycle Facilities

Pavement Marking Plan

ST ALBANS DRIVE

Dartmouth Rd. to New Hope Church Rd.

CITY OF RALEIGH

PUBLIC WORKS DEPARTMENT

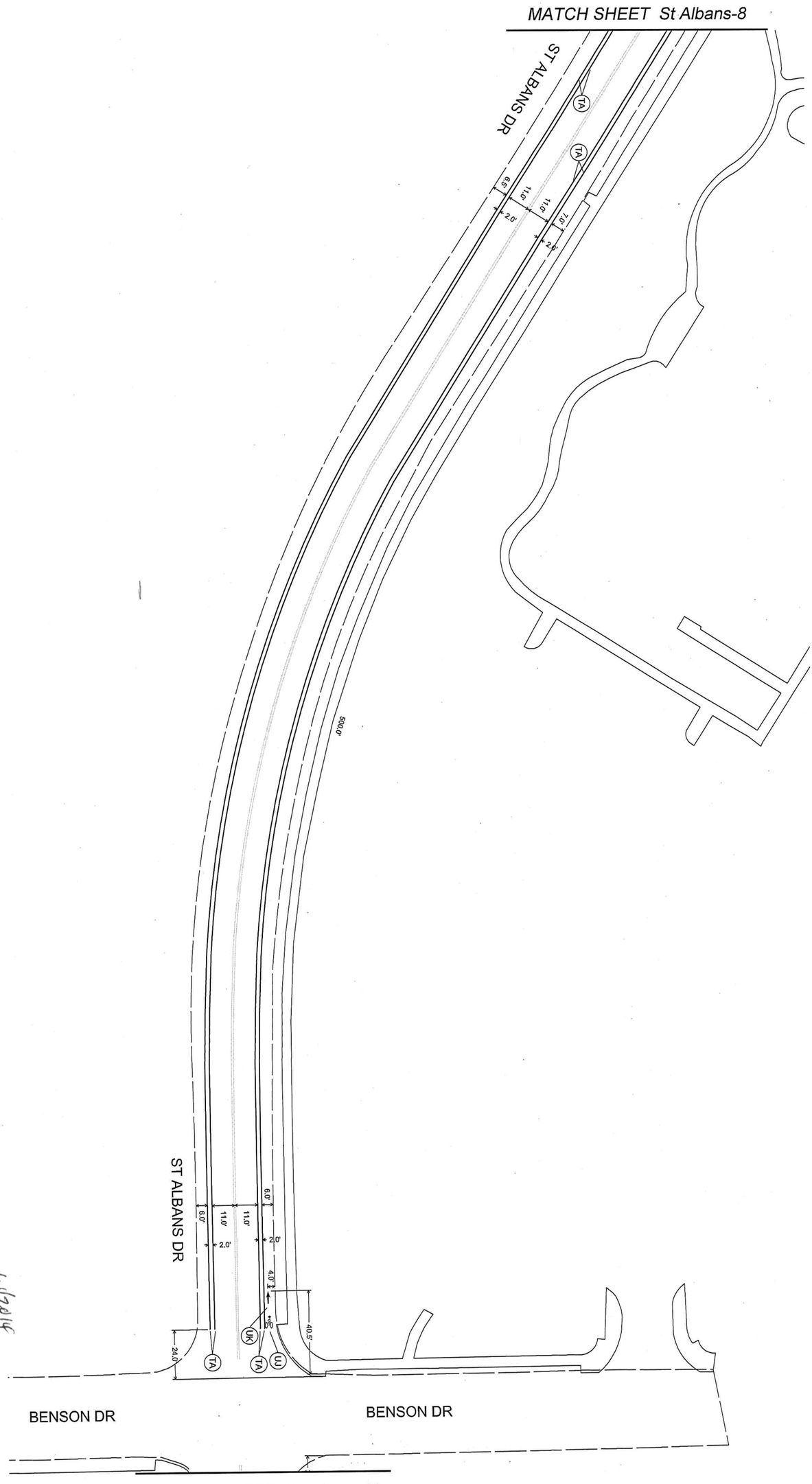

09/10/2014

NORTH CAROLINA PROFESSIONAL SEAL 027696 ENGINEER JOSEPH L. LEWIS

Engineering NC, P.C.
Transportation
Land Development
Environmental Services
4000 WestChase Blvd. Suite 530
Raleigh, North Carolina 27607
919.829.0328 • FAX 919.829.0329
NC License No.: C-3705

DATE:	SEPTEMBER 2014
CAD TECH:	BP
CHECKED BY:	AL
REVISIONS	
NO.	DATE
SCALES	
HSCALE 1"=50'	
VSCALE	
PROJECT	
VHB 39139.00	
SHEET NO	
St Albans-9	
DRAWING NO	

Proposed Bicycle Facilities
Pavement Marking Plan

ST ALBANS DRIVE
Dartmouth Rd. to New Hope Church Rd.

CITY OF RALEIGH
PUBLIC WORKS DEPARTMENT

MATCH SHEET St Albans-9

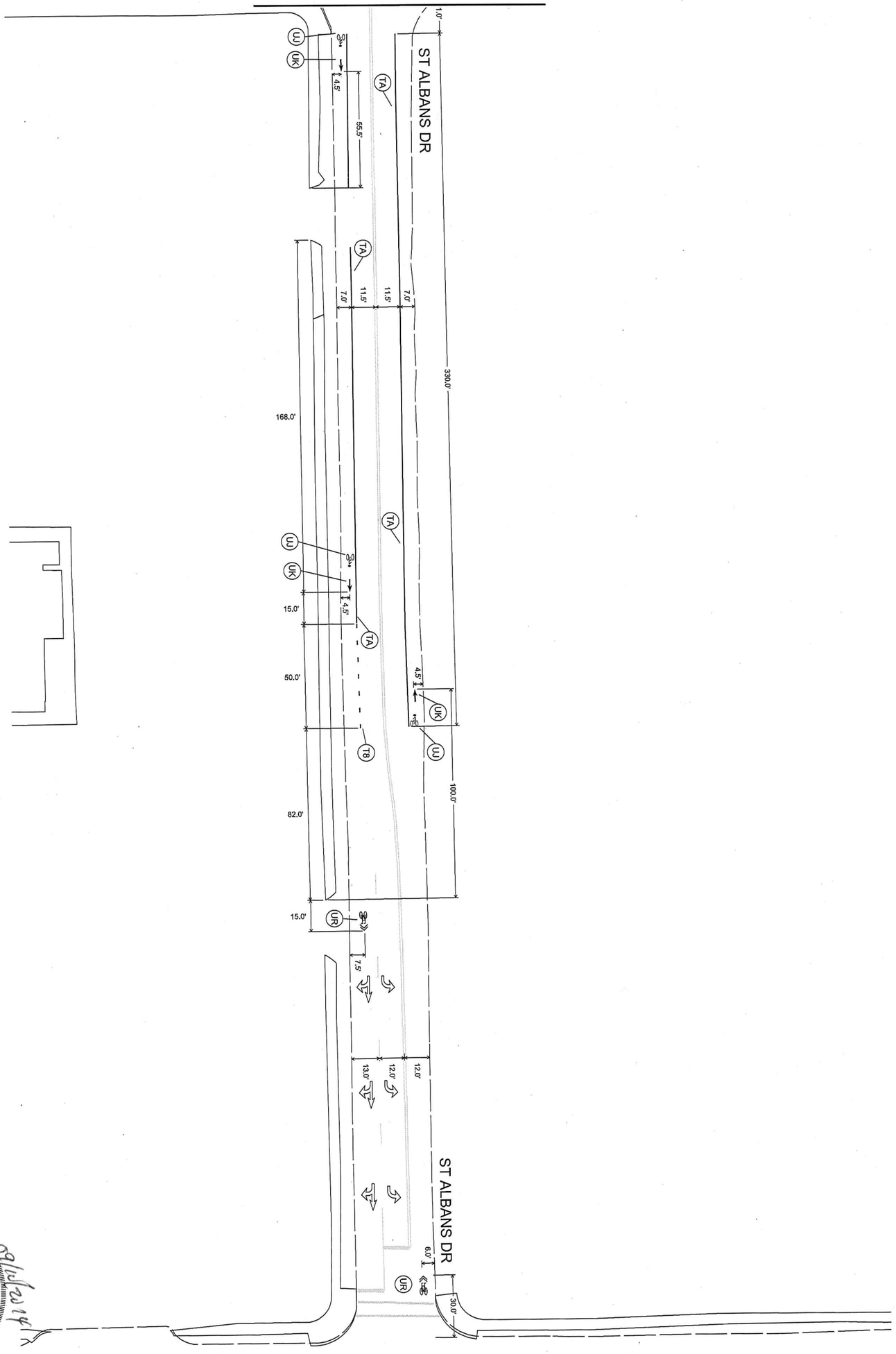

WAKE FOREST RD

WAKE FOREST RD

MATCH SHEET St Albans-11

NORTH CAROLINA PROFESSIONAL SEAL 027696 ENGINEER JOSEPH L. LEWIS

09/15/2014

VHB

Engineering NC, P.C.
Transportation
Land Development
Environmental Services
4000 WestChase Blvd, Suite 530
Raleigh, North Carolina 27607
919.829.0328 • FAX 919.829.0329
NC License No.: C-3705

DATE: SEPTEMBER 2014	Proposed Bicycle Facilities	ST ALBANS DRIVE	CITY OF RALEIGH
CADD TECH: BRP	Pavement Marking Plan	Dartmouth Rd. to New Hope Church Rd.	PUBLIC WORKS DEPARTMENT
CHECKED BY: JLL			
REVISIONS			
NO. / DATE			
SCALES HSCALE 1"=50' VSCALE			
PROJECT VHB 38139.00			
SHEET NO. St Albans-10			
DRAWING NO.			

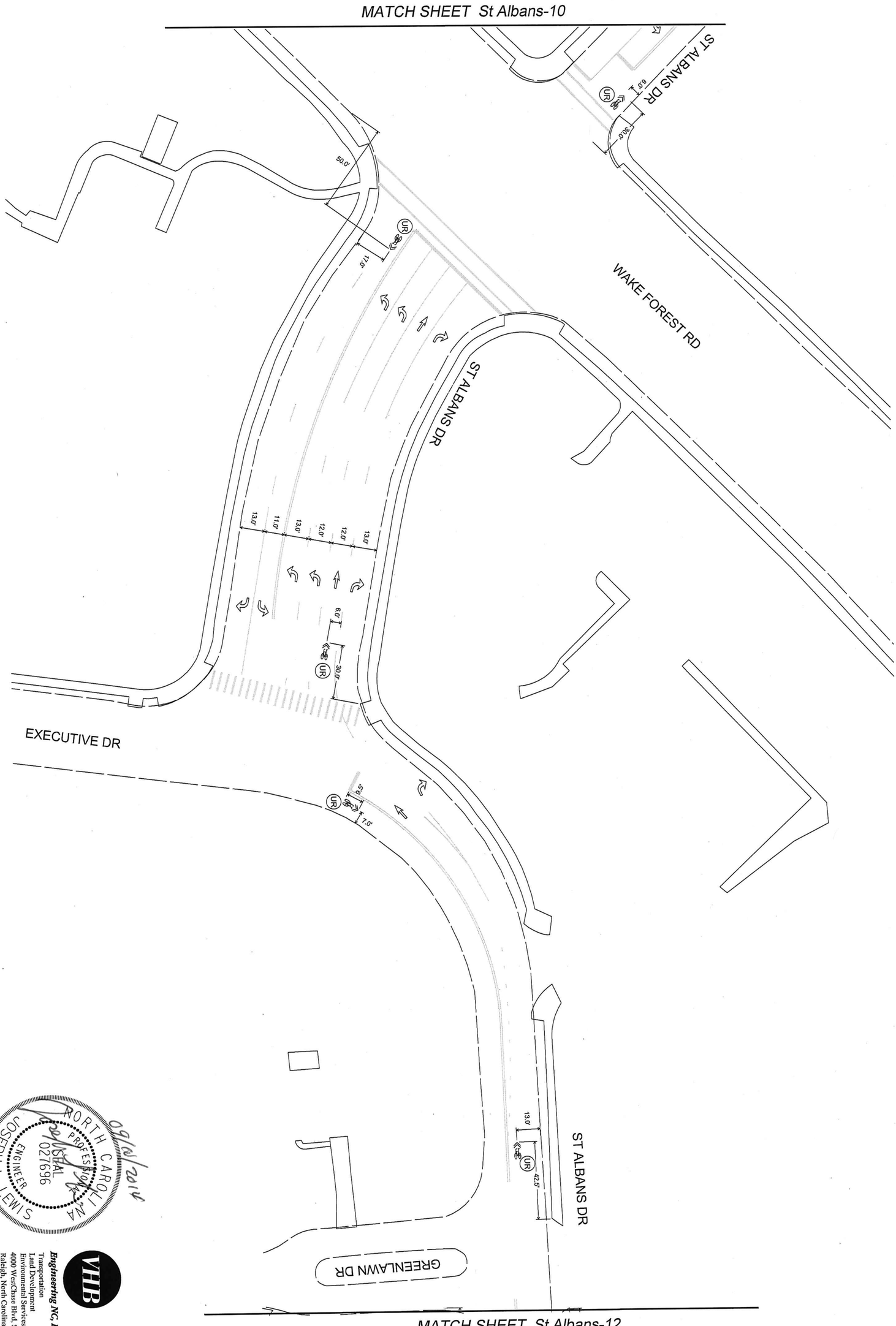

NORTH CAROLINA PROFESSIONAL SEAL 027696 ENGINEER JOSEPH L. LEWIS

09/09/2014

VHB

Engineering NC, P.C.
Transportation
Land Development
Environmental Services
4000 WestChase Blvd, Suite 530
Raleigh, North Carolina 27607
919.829.0328 • FAX 919.829.0329
NC License No.: C-3705

DATE: SEPTEMBER 2014	Proposed Bicycle Facilities	ST ALBANS DRIVE	CITY OF RALEIGH
CADD TECH: BRP	Pavement Marking Plan	Dartmouth Rd. to New Hope Church Rd.	PUBLIC WORKS DEPARTMENT
CHECKED BY: JLL			
REVISIONS			
NO. / DATE			
SCALES HSCALE 1"=50' VSCALE			
PROJECT VHB 36139.00			
SHEET NO. St Albans-11			
DRAWING NO.			

CITY OF RALEIGH
PUBLIC WORKS DEPARTMENT

ST ALBANS DRIVE
Dartmouth Rd. to New Hope Church Rd.

Proposed Bicycle Facilities
Pavement Marking Plan

09/10/2014
NORTH CAROLINA PROFESSIONAL SEAL 027696 ENGINEER JOSEPH L. LEWIS

VHB
Engineering NC, P.C.
Transportation
Land Development
Environmental Services
4000 WestChase Blvd, Suite 530
Raleigh, North Carolina 27607
919.829.0328 • FAX 919.829.0329
NC License No.: C-3705

DATE:	SEPTEMBER 2014
CADD TECH:	BRP
CHECKED BY:	JLL

REVISIONS

NO.	DATE

SCALES
HSCALE: 1"=50'
VSCALE:

PROJECT
VHB 38139.00

SHEET NO.
St Albans-12

DRAWING NO.

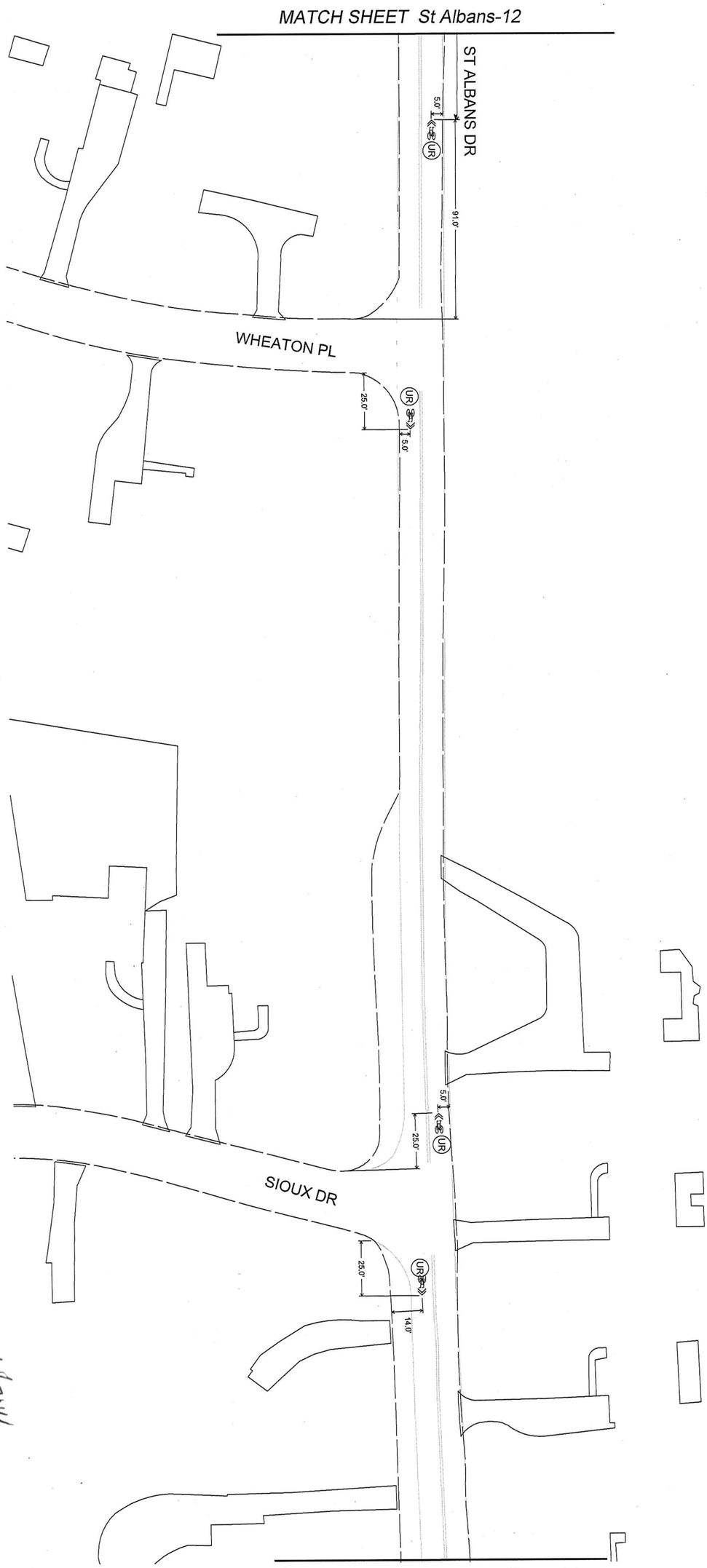

NORTH CAROLINA PROFESSIONAL SEAL 027696 ENGINEER JOSEPH L. LEWIS

09/10/2014

VHB
Engineering NC, P.C.
Transportation
Land Development
Environmental Services
4000 WestChase Blvd, Suite 530
Raleigh, North Carolina 27607
919.829.0328 • FAX 919.829.0329
NC License No.: C-3705

DATE: SEPTEMBER 2014	Proposed Bicycle Facilities Pavement Marking Plan	ST ALBANS DRIVE Dartmouth Rd. to New Hope Church Rd.	CITY OF RALEIGH PUBLIC WORKS DEPARTMENT
CADD TECH: BRP			
CHECKED BY: JLL			
REVISIONS			
NO. / DATE			
SCALES HSCALE 1"=50' VSCALE =			
PROJECT VHB 38139.00			
SHEET NO. St Albans-13			
DRAWING NO.			

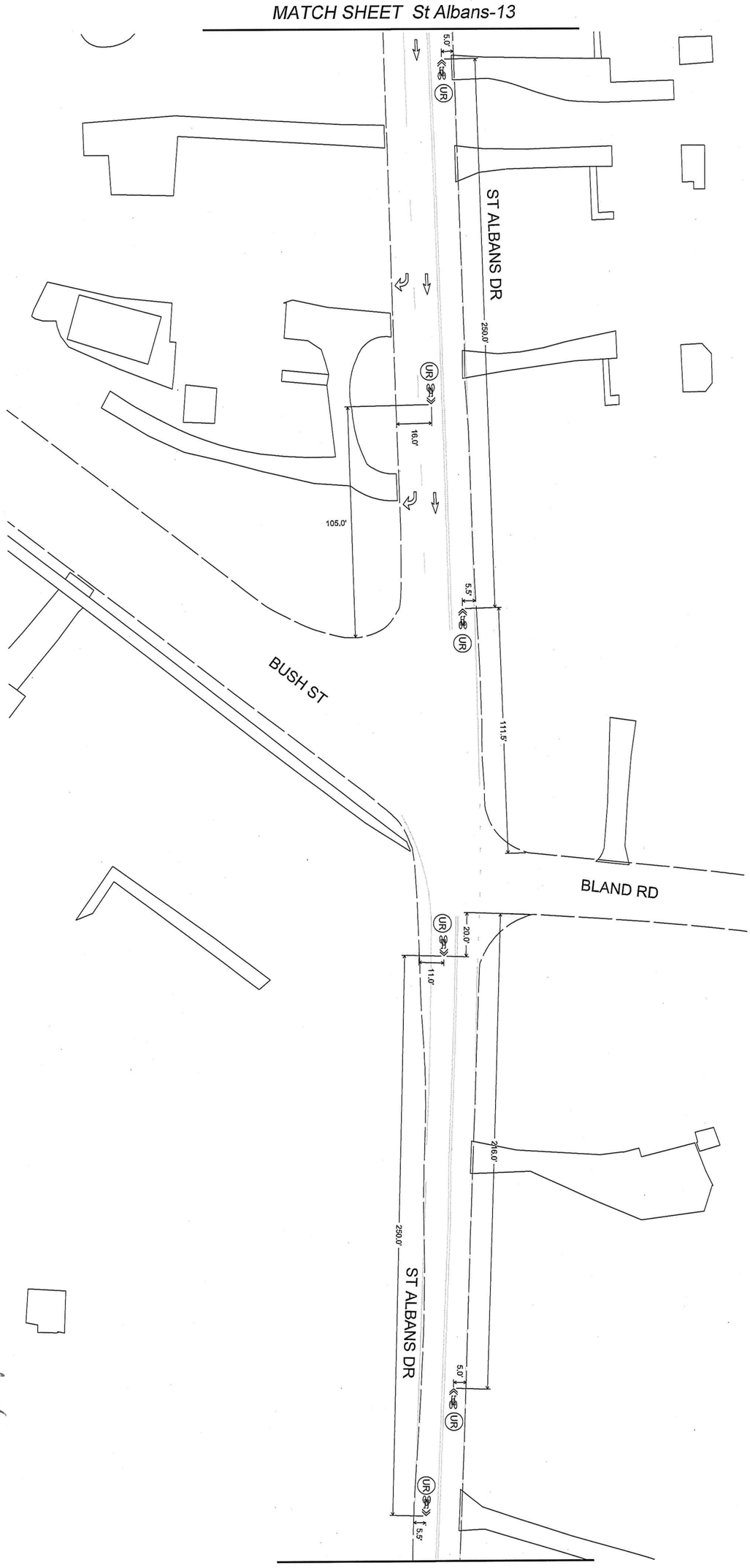

NORTH CAROLINA PROFESSIONAL SEAL 027696 ENGINEER JOSEPH L. LEWIS

Engineering NC, P.C.
Transportation
Land Development
Environmental Services
4000 WestChase Blvd. Suite 530
Raleigh, North Carolina 27607
919.829.0328 • FAX 919.829.0329
NC License No.: C-3705

DATE:	SEPTEMBER 2014
CADD TECH:	BRP
CHECKED BY:	AL

REVISIONS	
NO.	DATE

SCALES	
H/SCALE	1"=50'
V/SCALE	
PROJECT	
	VHB 38139.00
SHEET NO.	
	St Albans-14
DRAWING NO.	

Proposed Bicycle Facilities
Pavement Marking Plan

ST ALBANS DRIVE
Dartmouth Rd. to New Hope Church Rd.

CITY OF RALEIGH
PUBLIC WORKS DEPARTMENT

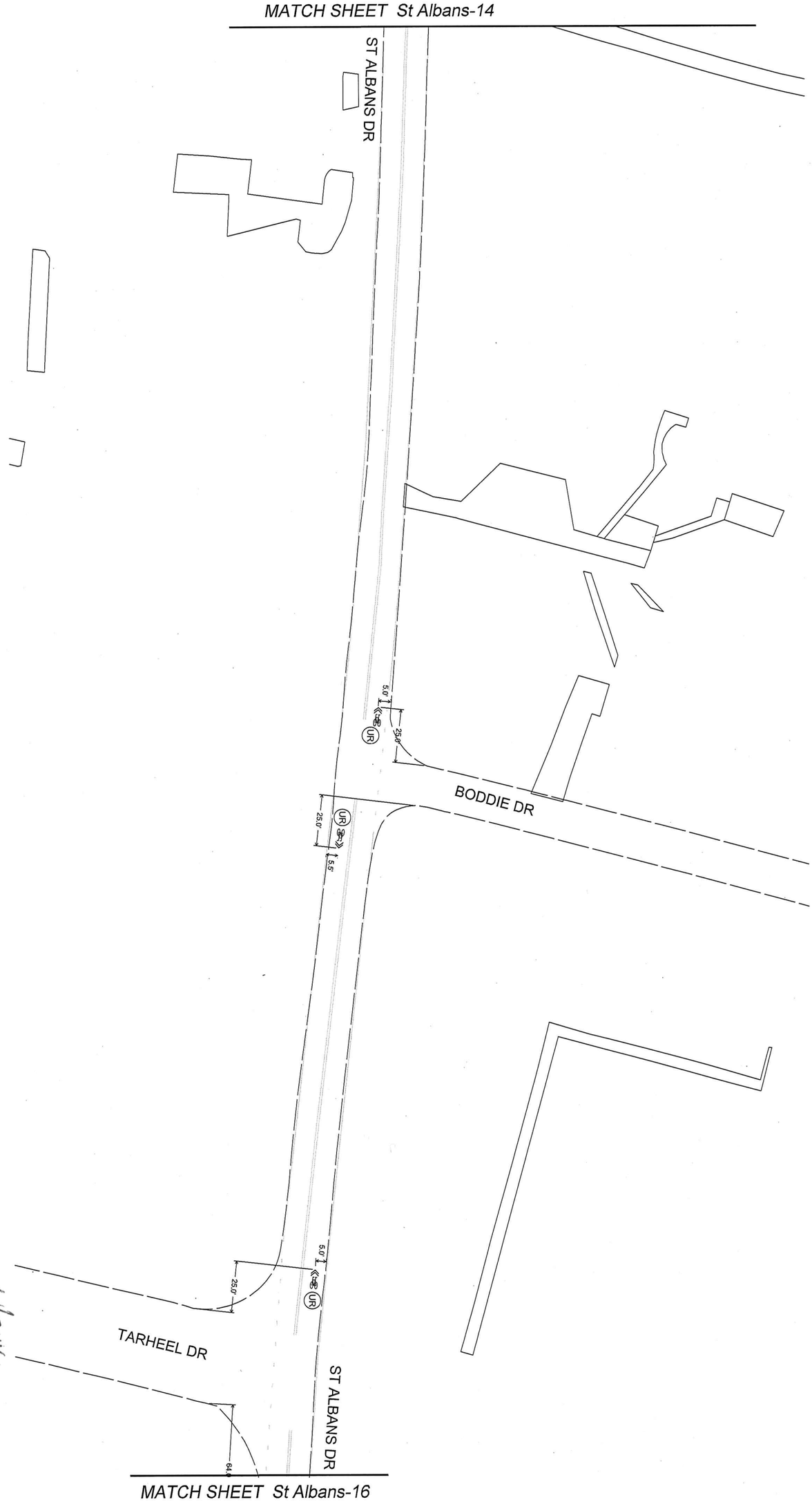

NORTH CAROLINA PROFESSIONAL ENGINEER SEAL 027696 JOSEPH L. LEWIS

9/11/2014

Engineering NC, PC.
Transportation
Land Development
Environmental Services
4000 WestChase Blvd, Suite 530
Raleigh, North Carolina 27607
919.829.0328 • FAX 919.829.0329
NC License No.: C-3705

VHB

DATE	SEPTEMBER 2014
CADD TECH	ERP
CHECKED BY	
ALL	

REVISIONS

NO.	DATE

SCALES
H/SCALE 1"=50'
V/SCALE

PROJECT
VHB 38139.00

SHEET NO
St Albans-15

DRAWING NO

Proposed Bicycle Facilities
Pavement Marking Plan

ST ALBANS DRIVE
Dartmouth Rd. to New Hope Church Rd.

CITY OF RALEIGH
PUBLIC WORKS DEPARTMENT

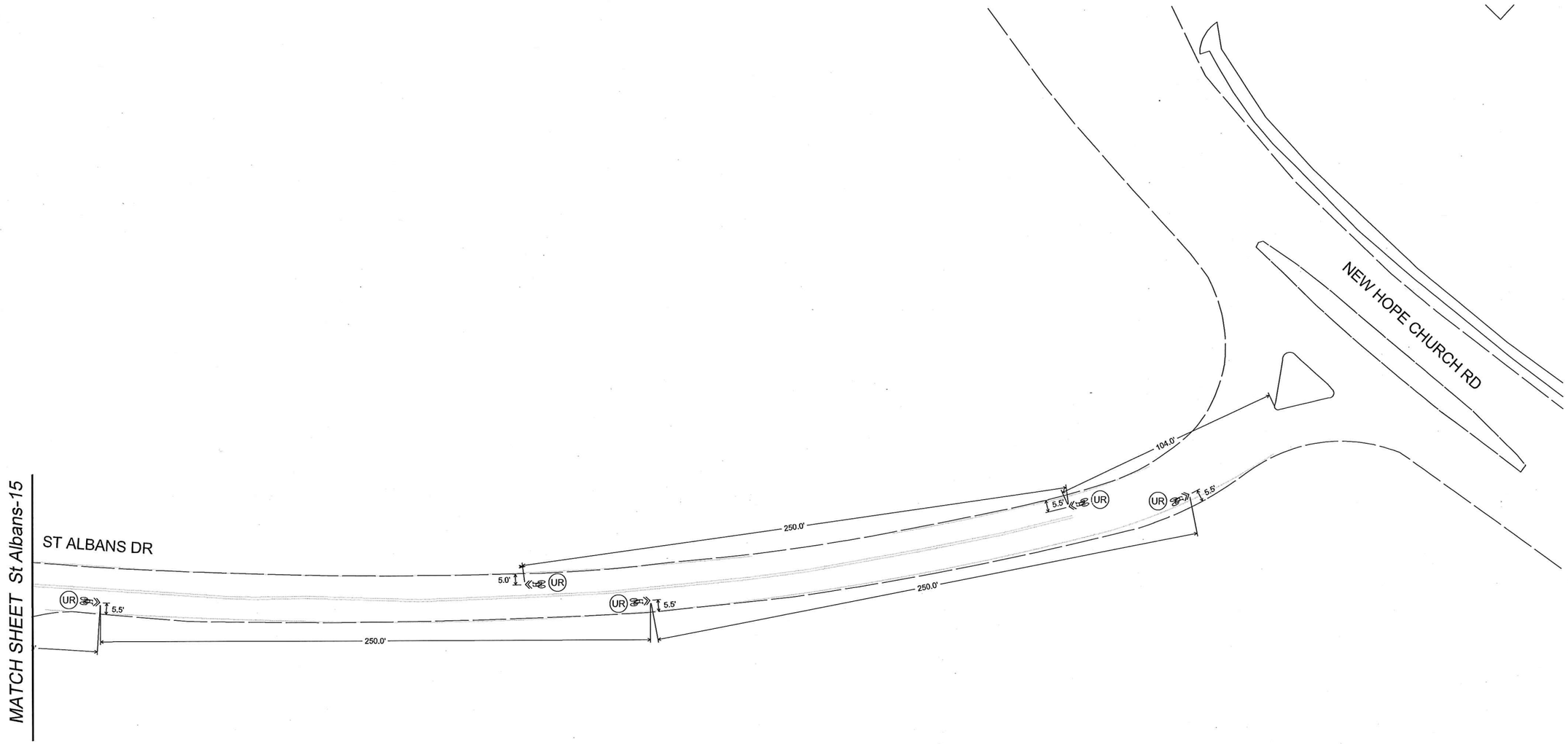

CITY OF RALEIGH
PUBLIC WORKS DEPARTMENT

ST ALBANS DRIVE
Dartmouth Rd. to New Hope Church Rd.

Proposed Bicycle Facilities
Pavement Marking Plan

09/10/2014
NORTH CAROLINA PROFESSIONAL SEAL 027696 ENGINEER JOSEPH L. LEWIS

VHB
Engineering NC, P.C.
Transportation
Land Development
Environmental Services
4000 WestChase Blvd, Suite 530
Raleigh, North Carolina 27607
919.829.0328 • FAX 919.829.0329
NC License No.: C-3705

DATE:	SEPTEMBER 2014
CADD TECH:	BRP
CHECKED BY:	JLL

REVISIONS

NO.	DATE

SCALES
HSCALE 1"=50'
VSCALE

PROJECT
VHB 38139.00

SHEET NO.
St Albans-16

DRAWING NO.