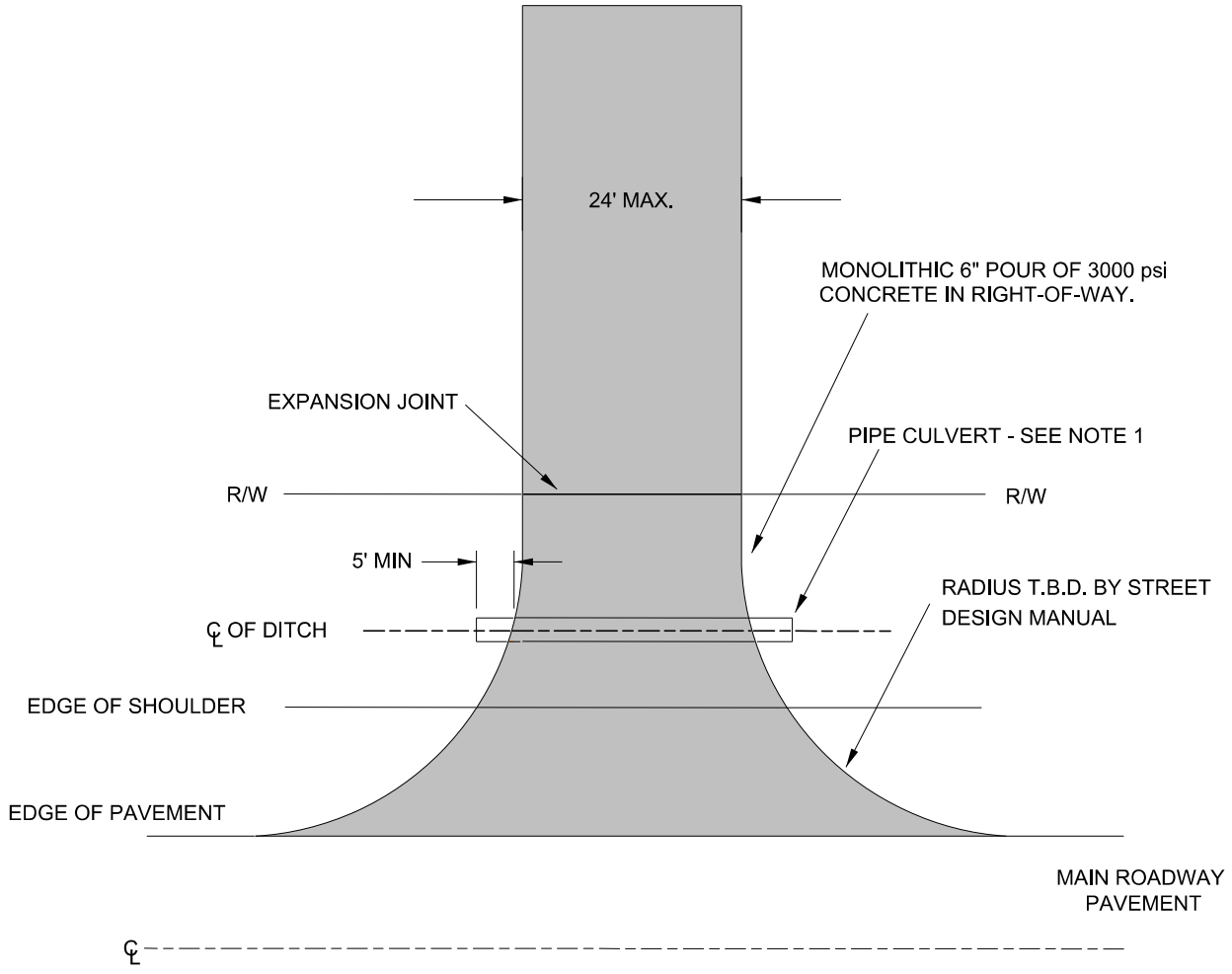

WITH UNPAVED ROADSIDE DITCH

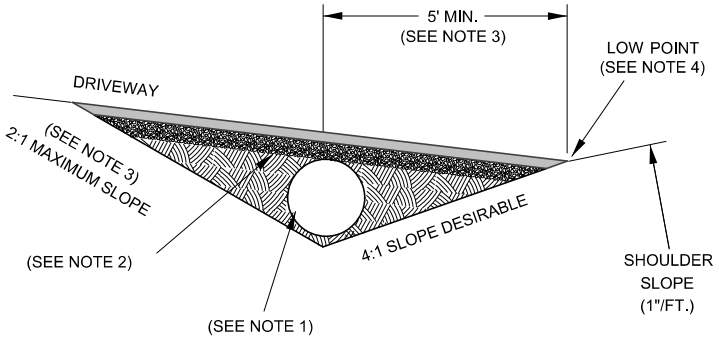

NOTES:

1. PIPE TO BE RCP OR HDPE AND SIZED TO CARRY THE DESIGN FLOW OF THE DITCH FOR A 10-YEAR, 24-HOUR STORM EVENT; THE MINIMUM ACCEPTABLE PIPE SIZE IS 15" IF THE DESIGN FLOW WOULD REQUIRE A SMALLER PIPE.
2. 12" MINIMUM COVER OVER PIPE MEASURED FROM TOP OF PAVEMENT.
3. STEEPER SLOPES CAN BE ALLOWED WHERE SPECIAL STABILIZATION IS PROVIDED IN ACCORDANCE WITH EROSION AND SEDIMENTATION CONTROL ORDINANCE.
4. USE 5' VERTICAL CURVE FOR TRANSITION.
5. SEE CITY OF RALEIGH STREETS, SIDEWALKS, AND DRIVEWAY ACCESS HANDBOOK FOR COMMERCIAL DRIVEWAYS.
6. NO EXPOSED AGGREGATE OR OTHER SPECIAL SURFACE TREATMENTS IN RIGHT OF WAY

CITY OF RALEIGH
PUBLIC WORKS DEPARTMENT

REVISIONS	*DATE: 9/1/13*	*NOT TO SCALE*
	RESIDENTIAL DRIVEWAY INSTALLATION ON NON CURB & GUTTERED STREETS	
	T-10.03	